| Revision | Approved by | Number of Pages |
|---|---|---|
| 000 | | 103 |
| Approval Date | 26/10-17 | |

# General Nuclear System Ltd.

UK HPR1000 GDA Project

| **Document Reference:** | **HPR/GDA/PSR/0010** |
|---|---|

# Preliminary Safety Report

# Chapter 10

# Auxiliary Systems

This document has been prepared on behalf of General Nuclear System Limited (GNS) with the support of China General Nuclear Power Corporation (CGN) and Électricité de France S.A. (EDF).

Although due care has been taken in compiling the content of this document, neither GNS, CGN, EDF nor any of their respective affiliates accept any liability in respect to any errors, omissions or inaccuracies contained or referred to in it.

# DISTRIBUTION LIST

| Recipients | Cross Box |
|---|---|
| GNS Executive | ☐ |
| GNS all staff | ☐ |
| GNS and BRB all staff | ☒ |
| CGN | ☒ |
| EDF | ☒ |
| Regulators | ☒ |
| Public | ☐ |

# SENSITIVE INFORMATION RECORD

| Section Number | Section Title | Page | Content | Category |
|---|---|---|---|---|
| | | | | |
| | | | | |
| | | | | |
| | | | | |
| | | | | |
| | | | | |
| | | | | |
| | | | | |
| | | | | |

# Table of Contents

10.1 List of Abbreviations and Acronyms....15

10.2 Introduction....19

10.3 Chemical and Volume Control System (RCV [CVCS])....20

10.3.1 Safety Requirements....20

10.3.1.1 Safety Functions....20

10.3.1.2 Safety Functional Requirements....21

10.3.2 Role of the System....21

10.3.2.1 Normal Conditions....21

10.3.2.2 Fault Conditions....22

10.3.3 Design Basis....22

10.3.3.1 Safety Design Basis....22

10.3.3.2 Operation Design Basis....22

10.3.4 System Description....23

10.3.4.1 General System Description....23

10.3.4.2 Main Equipment....24

10.3.4.3 System Layout....25

10.3.5 Preliminary Design Substantiation....25

10.3.5.1 Compliance with Regulations....25

10.3.5.2 Compliance with Safety Related Requirements....26

10.3.5.3 Compliance with Testing Requirement....26

10.3.6 Functional Diagram....26

10.4 Reactor Boron and Water Makeup System (REA [RBWMS]) .....29

10.4.1 Safety Requirements .....29

10.4.1.1 Safety Functions.....29

10.4.1.2 Safety Functional Requirements.....29

10.4.1.3 Other Additional Requirements .....30

10.4.2 Role of the System .....30

10.4.2.1 Normal Conditions.....30

10.4.2.2 Fault Conditions.....30

10.4.3 Design Basis.....30

10.4.4 System Description .....31

10.4.4.1 General System Description .....31

10.4.4.2 Main Equipment.....31

10.4.4.3 System Layout .....32

10.4.5 Preliminary Design Substantiation .....32

10.4.5.1 Compliance with Regulations.....32

10.4.5.2 Compliance with Safety Related Requirements.....32

10.4.5.3 Compliance with Testing Requirement.....33

10.4.6 Functional Diagram.....33

10.5 Coolant Storage and Treatment System (TEP [CSTS]) .....36

10.5.1 Safety Requirements .....36

10.5.1.1 Safety Functions .....36

10.5.1.2 Safety Functional Requirements.....36

10.5.2 Role of the System .....36

10.5.2.1 Normal Conditions .....36

10.5.2.2 Fault Conditions .....37

10.5.3 Design Basis .....37

10.5.4 System Description .....38

10.5.4.1 General System Description .....38

10.5.4.2 Main Equipment .....39

10.5.4.3 System Layout .....39

10.5.5 Preliminary Design Substantiation .....39

10.5.5.1 Compliance with Regulations .....39

10.5.5.2 Compliance with Safety Related Requirements .....39

10.5.5.3 Compliance with Testing Requirement .....40

10.5.6 Functional Diagram .....40

10.6 Nuclear Sampling System (REN [NSS]) .....43

10.6.1 Safety Requirements .....43

10.6.1.1 Safety Functions .....43

10.6.1.2 Safety Functional Requirements .....43

10.6.2 Role of the System .....43

10.6.2.1 Normal Conditions .....43

10.6.2.2 Fault Conditions .....44

10.6.3 Design Basis .....44

10.6.3.1 Safety Design Basis .....44

10.6.3.2 Operation Design Basis .....44

10.6.4 System Description .....44

10.6.4.1 General System Description .....44

10.6.4.2 Main Equipment .....44

10.6.4.3 System Layout .....45

10.6.5 Preliminary Design Substantiation .....45

10.6.5.1 Compliance with Regulations .....45

10.6.5.2 Compliance with Safety Related Requirements .....45

10.6.5.3 Compliance with Testing Requirement .....45

10.6.6 Functional Diagram .....45

10.7 Fuel Handling and Storage System (PMC) .....49

10.7.1 Safety Requirements .....49

10.7.1.1 Safety Functions .....49

10.7.1.2 Safety Functional Requirements .....49

10.7.1.3 Other Additional Requirements .....50

10.7.2 Role of the System .....50

10.7.2.1 Normal Conditions .....50

10.7.2.2 Fault Conditions .....50

10.7.3 Design Basis .....50

10.7.3.1 Underwater Fuel Storage .....50

10.7.3.2 Dry Fuel Storage .....51

10.7.3.3 Fuel Handling System .....51

10.7.4 System Description .....52

10.7.4.1 General System Description .....52

10.7.4.2 Main Equipment.....52

10.7.4.3 System Layout .....52

10.7.5 Preliminary Design Substantiation .....52

10.7.5.1 Compliance with Regulations.....52

10.7.5.2 Compliance with Safety Related Requirements .....52

10.7.5.3 Compliance with Examination, Maintenance and Testing Requirement .....53

10.8 Fuel Pool Cooling and Treatment System (PTR [FPCTS]) .....55

10.8.1 Safety Requirements .....55

10.8.1.1 Safety Functions.....55

10.8.1.2 Safety Functional Requirements.....55

10.8.2 Role of the System .....56

10.8.2.1 Normal Conditions .....56

10.8.2.2 Fault Conditions .....56

10.8.3 Design Basis.....56

10.8.3.1 Safety Design Basis.....56

10.8.3.2 Operation Design Basis .....56

10.8.4 System Description .....56

10.8.4.1 General System Description .....56

10.8.4.2 Main Equipment.....57

10.8.4.3 System Layout .....57

10.8.5 Preliminary Design Substantiation .....58

10.8.5.1 Compliance with Regulations.....58

10.8.5.2 Compliance with Safety Related Requirements.....58

10.8.5.3 Compliance with Testing Requirement.....58

10.8.6 Functional Diagram.....58

10.9 Component Cooling Water System (RRI [CCWS]) .....61

10.9.1 Safety Requirements .....61

10.9.1.1 Safety Functions.....61

10.9.1.2 Safety Functional Requirements.....61

10.9.2 Role of the System .....62

10.9.2.1 Normal Conditions .....62

10.9.2.2 Fault Conditions.....62

10.9.3 Design Basis.....62

10.9.3.1 Safety Design Basis.....62

10.9.3.2 Operation Design Basis .....63

10.9.4 System Description .....63

10.9.4.1 General System Description .....63

10.9.4.2 Main Equipment.....63

10.9.4.3 System Layout .....64

10.9.5 Preliminary Design Substantiation .....64

10.9.5.1 Compliance with Regulations.....64

10.9.5.2 Compliance with Safety Related Requirements .....64

10.9.5.3 Compliance with Testing Requirement ..... 64

10.9.6 Functional Diagram ..... 64

10.10 Essential Service Water System (SEC [ESWS]) ..... 69

10.10.1 Safety Requirements ..... 69

10.10.1.1 Safety Functions ..... 69

10.10.1.2 Safety Functional Requirements ..... 69

10.10.2 Role of the System ..... 69

10.10.2.1 Normal Conditions ..... 69

10.10.2.2 Fault Conditions ..... 70

10.10.3 Design Basis ..... 70

10.10.3.1 Safety Design Basis ..... 70

10.10.4 System Description ..... 70

10.10.4.1 General System Description ..... 70

10.10.4.2 Main Equipment ..... 70

10.10.4.3 System Layout ..... 71

10.10.5 Preliminary Design Substantiation ..... 71

10.10.5.1 Compliance with Regulations ..... 71

10.10.5.2 Compliance with Safety Related Requirements ..... 71

10.10.5.3 Compliance with Testing Requirement ..... 71

10.10.6 Functional Diagram ..... 72

10.11 Heating, Ventilation and Air Conditioning Systems ..... 75

10.11.1 Safety Requirements ..... 75

10.11.1.1 Safety Functions .....75

10.11.1.2 Safety Functional Requirements .....75

10.11.2 Role of the System .....76

10.11.2.1 Normal Conditions .....76

10.11.2.2 Fault Conditions .....76

10.11.3 Design Basis .....76

10.11.3.1 Safety Design Basis .....76

10.11.3.2 Operation Design Basis .....77

10.11.4 System Description .....78

10.11.4.1 General System Description .....78

10.11.4.2 Main Equipment .....78

10.11.4.3 System Layout .....79

10.11.5 Preliminary Design Substantiation .....79

10.11.5.1 Compliance with Regulations .....79

10.11.5.2 Compliance with Safety Related Requirements .....79

10.11.5.3 Compliance with Hazard Protection Requirement .....79

10.11.5.4 Compliance with Qualification Requirement .....79

10.11.5.5 Compliance with Testing Requirement .....79

10.11.6 Functional Diagram .....79

10.12 Fire-fighting Systems .....89

10.12.1 Safety Requirements .....89

10.12.1.1 Safety Functions .....89

10.12.1.2 Safety Functional Requirements ..... 89

10.12.2 Role of the System ..... 90

10.12.2.1 Normal Conditions ..... 90

10.12.2.2 Fault Conditions ..... 90

10.12.2.3 Hazard Conditions ..... 90

10.12.3 Principle and Objective of the Fire Protection ..... 90

10.12.4 System Description ..... 90

10.12.4.1 General System Description ..... 90

10.12.4.2 Main Equipment ..... 91

10.12.4.3 System Layout ..... 91

10.12.5 Preliminary Design Substantiation ..... 91

10.12.5.1 Compliance with Regulations ..... 91

10.12.5.2 Compliance with Safety Related Requirements ..... 91

10.12.5.3 Compliance with Hazard Protection Requirement ..... 92

10.12.5.4 Compliance with Qualification Requirement ..... 92

10.12.5.5 Compliance with Testing Requirement ..... 92

10.12.6 Functional Diagram ..... 92

10.13 Heavy Load Lifting System ..... 95

10.13.1 Design Requirements ..... 95

10.13.2 Polar Crane ..... 95

10.13.2.1 Description ..... 95

10.13.2.2 Classification ..... 95

10.13.2.3 Safety Evaluation .....95

10.13.2.4 Material, Inspection and Test requirements .....96

10.13.3 Crane for Spent Fuel Containers.....96

10.13.3.1 Description.....96

10.13.3.2 Classification.....97

10.13.3.3 Safety Evaluation .....97

10.13.3.4 Material, Inspection and Test requirements .....97

10.14 Safety Chilled Water System .....98

10.14.1 Safety Requirements .....98

10.14.1.1 Safety Functions.....98

10.14.1.2 Safety Functional Requirements.....98

10.14.2 Role of the System .....98

10.14.2.1 Normal Conditions .....98

10.14.2.2 Fault Conditions.....98

10.14.3 Design Basis.....99

10.14.3.1 Safety Design Basis.....99

10.14.3.2 Operation Design Basis .....99

10.14.4 System Description .....99

10.14.4.1 General System Description .....99

10.14.4.2 Main Equipment.....99

10.14.4.3 System Layout.....99

10.14.5 Preliminary Design Substantiation .....99

10.14.5.1 Compliance with Regulations.....99

10.14.5.2 Compliance with Safety Related Requirements.....99

10.14.5.3 Compliance with Hazard Protection Requirement.....99

10.14.5.4 Qualification.....100

10.14.5.5 Compliance with Testing Requirement.....100

10.14.6 Functional Diagram.....100

10.15 References.....103

## 10.1 List of Abbreviations and Acronyms

| | |
|---|---|
| ALARA | As Low As Reasonably Achievable |
| APG | Steam Generator Blowdown System [SGBS] |
| ASP | Secondary Passive Heat Removal System [SPHRS] |
| ATWS | Anticipated Transient Without Scram |
| BEJ | Extra Cooling System and Fire-fighting System Building |
| BFX | Fuel Building |
| BNX | Nuclear Auxiliary Building |
| BPA | Essential Service Water Pump Station-A |
| BPB | Essential Service Water Pump Station-B |
| BRX | Reactor Building |
| DBC | Design Basis Condition |
| DCL | Main Control Room Air Conditioning System [MCRACS] |
| DEC | Design Extension Condition |
| DEL | Safety Chilled Water System [SCWS] |
| DER | Operational Chilled Water System [OCWS] |
| DVD | Diesel Building Ventilation System [DBVS] |
| DVL | Electrical Division of Safeguard Building Ventilation System [EDVS] |
| DVW | Access Building Uncontrolled Area Ventilation System [ABUAVS] |
| DWL | Safeguard Building Controlled Area Ventilation System [SBCAVS] |
| DWN | Nuclear Auxiliary Building Ventilation System [NABVS] |
| DWQ | Waste Treatment Building Ventilation System [WTBVS] |
| DWW | Access Building Controlled Area Ventilation System [ABCAVS] |
| DWK | Fuel Building Ventilation System [FBVS] |
| DXS | Essential Service Water Pumping Station Ventilation System [ESWVS] |

| | |
|---|---|
| EBA | Containment Sweeping and Blown down Ventilation System [CSBVS] |
| ECS | Extra Cooling System |
| EDE | Annulus Ventilation System [AVS] |
| EDG | Emergency Diesel Generator |
| EHR | Containment Heat Removal System [CHRS] |
| EVF | Containment Internal Filtration System [CIFS] |
| EVR | Containment Cooling and Ventilation System [CCVS] |
| GDA | Generic Design Assessment |
| HAD | Chinese Nuclear Safety Guidelines |
| HEPA | High Efficiency Particulate Air |
| HPR1000 | Hua-long Pressurized Reactor |
| HPR1000 (FCG3) | Hua-long Pressurized Reactor under construction at Fangchenggang nuclear power plant unit 3 |
| HVAC | Heating, Ventilation and Air Conditioning |
| IRWST | In-Containment Refueling Water Storage Tank |
| IVR | In-Vessel Retention |
| JAC | Fire-fighting Water Production System [FWPS] |
| JPI | Nuclear Island Fire Protection System [NIFPS] |
| JPS | Mobile and Portable Fire-fighting Equipment [MPFE] |
| JPV | Emergency Diesel Generator Building Fire-fighting System [DBFS] |
| KRT | Plant Radiation Monitoring System [PRMS] |
| LOOP | Loss of Offsite Power |
| NI | Nuclear Island |
| NPP | Nuclear Power Plant |
| PMC | Fuel Handling and Storage System [FHSS] |
| PTR | Fuel Pool Cooling and Treatment System [FPCTS] |
| RBS | Emergency Boration System [EBS] |

| | |
|---|---|
| RCCA | Rod Cluster Control Assembly |
| RCC-E | Design and Building Rules for Electric Equipment for Pressurized Water Reactor Nuclear Islands |
| RCC-M | Design and Building Rules for Mechanical Equipment for Pressurized Water Reactor Nuclear Islands |
| RCD | Reactor Complete Discharge |
| RCPB | Reactor Coolant Pressure Boundary |
| RCV | Chemical and Volume Control System [CVCS] |
| REA | Reactor Boron and Water Makeup System [RBWMS] |
| REN | Nuclear Sampling System [NSS] |
| RHR | Residual Heat Removal |
| RIS | Safety Injection System [SIS] |
| RPE | Nuclear Island Vent and Drain System [VDS] |
| RRI | Component Cooling Water System [CCWS] |
| SBO | Station Black Out |
| SEC | Essential Service Water System [ESWS] |
| SED | NI Dematerialized Water Distribution System [DWDS(NI)] |
| SFP | Spent Fuel Pool |
| SG | Steam Generator |
| SGN | Nitrogen Distribution System [NDS] |
| SGTR | Steam Generator Tube Rupture |
| SSE | Safe Shutdown Earthquake |
| SI | Safety Injection |
| TEG | Gaseous Waste Treatment System [GWTS] |
| TEP | Coolant Storage and Treatment System [CSTS] |
| TLOCC | Total Loss of Cooling Chain |
| TPA | Thimble Plug Assembly |
| UK HPR1000 | The UK version of the Hua-long Pressurized Reactor |
| UPS | Uninterrupted Power Supply |

VCT Volume Control Tank

System codes (XXX) and system abbreviations (YYY) are provided for completeness in the format (XXX [YYY]), e.g. Chemical and Volume Control System (RCV [CVCS]).

## 10.2 Introduction

This chapter supports the following high level objective:

The design and intended construction and operation of the UK HPR1000 will protect the works and the public by providing multiple levels of defense to fulfill the fundamental safety functions.

This chapter will demonstrate the following:

The Safety Systems and Auxiliary Systems provide cooling water to remove heat from the fuel, and boration to control criticality, and measures to mitigate a breach of confinement.

Auxiliary systems are systems that are one or more of the following:

- Essential to help the plant to maintain normal operation,
- Safety related systems, i.e. they do not carry out safety functions directly but they support safety systems to achieve safety functions such as containing radioactive material or mitigating the consequences of hazard,
- Active waste treatment systems.

The main auxiliary systems of HPR1000 (FCG3) are listed as below.

- Chemical and Volume Control System (RCV [CVCS]),
- Reactor Boron and Water Makeup System (REA [RBWMS]),
- Coolant Storage and Treatment System (TEP [CSTS]),
- Nuclear Sampling System (REN [NSS]),
- Fuel Handling and Storage System (PMC [FHSS]),
- Spent Fuel Pool Cooling and Cleanup System (PTR [FPCTS]),
- Component Cooling Water Systems (RRI [CCWS]),
- Essential Service Water System (SEC [ESWS]),
- Air Conditioning, Heating, Cooling & Ventilation (HVAC) Systems,
- Fire-Fighting systems,
- Heavy Load Lifting System,
- Safety Chilled Water System (DEL [SCWS]).

For each system in turn, the following will be provided:

- The safety requirements
- The role of the system

- The design basis
- A description of the system in general including the main equipment, and layout
- The preliminary design substantiation
- The functional diagram

The systems for the HPR1000 (FCG3) have been classified according to the process in sub-chapter 4.7 and where this has been done the classification is reported below.

Where systems have been classified, the requirements in terms of codes and standards, regulations, single failure criterion, seismic classification, qualification, emergency power supply, hazard protection, maintenance, and testing requirements are specified in chapter 4.

## 10.3 Chemical and Volume Control System (RCV [CVCS])

### 10.3.1 Safety Requirements

10.3.1.1 Safety Functions

a) Reactivity Control

When an anti-dilution protection signal occurs, the suction line of the charging pumps from the volume control tank and the hydrogen station should be automatically isolated to stop the dilution from RCV [CVCS] and connected systems.

In the case of an excessive rise in the secondary steam flow rate, especially a steam line break accident (DBC-3 or DBC-4), charging line should be isolated.

To guarantee that safety injection will inject enough boron, charging line should be isolated when Safety Injection (SI) and Steam Generator (SG) pressure low signals appear simultaneously.

b) Residual Heat Removal

The RCV [CVCS] does not perform the safety function of residual heat removal.

c) Confinement of Radioactive Substance

In case of a pipeline failure downstream the Reactor Coolant Pressure Boundary (RCPB) isolation valve, the RCV [CVCS] should ensure RCPB isolation.

In case of Steam Generator Tube Rupture (SGTR) event, the charging line should be isolated to facilitate RCP [RCS] depressurization and to mitigate the reactor coolant leakage to secondary side through broken SG tubes.

The RCV [CVCS] should ensure containment isolation of the system lines that penetrate containment during DBC 2-4 and DEC accidents.

Isolate high pressure cooler to mitigate reactor coolant loss outside the containment and

to stop activity pickup into RRI [CCWS] in DEC events.

10.3.1.2 Safety Functional Requirements

a) Regulations Requirement

See sub-chapter 4.8.

b) Safety Related Requirements

1) Safety Classification

Safety classification principles are presented in sub-chapter 4.7.

2) Single Failure Criterion

Single failure criterion should be applied to the equipment which ensures FC1 and FC2 classified safety functions.

3) Seismic Classification

Seismic classification principles presented in sub-chapter 4.7.6 should be applied.

4) Qualification

Qualification principles presented in sub-chapter 4.9 should be applied.

5) Emergency Power Supply

All the electrical equipment which ensures safety functions should be powered by emergency power supply.

6) Hazard Protection

The RCV [CVCS] should be protected against internal hazards and external hazards in accordance with chapter 18 and 19.

c) Testing

The functions of system should be demonstrated by commissioning tests. Safety related components should be subject to periodic test.

### 10.3.2 Role of the System

10.3.2.1 Normal Conditions

The RCV [CVCS] is designed for the following major functions:

a) Reactor coolant volume control during all normal plant operating conditions by letdown and charging flow;

b) Reactor reactivity control by adjustment of the boron concentration of the reactor coolant;

c) Reactor coolant chemical control by injection of hydrogen and chemical additives;

d) Reactor coolant purification;

e) Providing letdown flow to TEP [CSTS] for reactor coolant purification, degasification, treatment and storage;

f) Maintaining the No. 1 seal water injection flow to the reactor coolant pump and collecting the reactor coolant pump No.1 seal leak-off;

g) Providing means for auxiliary spray to the pressurizer;

h) Controlling the reactor coolant pressure when the pressurizer is water solid;

i) Providing means for water filling, draining, and hydraulic tests of RCP [RCS].

10.3.2.2 Fault Conditions

During accident conditions, the RCV [CVCS] is running the same way as during normal operation conditions until the isolation signal such as containment isolation is triggered. After the isolation signal is triggered, the RCV [CVCS] will be out of service.

Because of the electric components powered by Emergency Diesel Generators (EDGs), the operation of the RCV [CVCS] except the chemical dosing unit is not interrupted under Loss of Offsite Power (LOOP) conditions. When the reactor coolant pumps are out of service, the RCV [CVCS] provides auxiliary spray to the pressurizer if needed.

RCPB isolation valves and containment isolation valves are powered by batteries and SBO Diesels, so these valves can be operated during Station Black Out (SBO) accident.

### 10.3.3 Design Basis

10.3.3.1 Safety Design Basis

The RCV [CVCS] is not a safety system, but in some accident conditions, this system is involved in safety actions and system isolation should be performed correctly.

10.3.3.2 Operation Design Basis

The RCV [CVCS] is capable of some necessary functions for continuous normal operation of the plant. Redundant equipment (pumps, demineralizers, and filters) are designed to ensure reliability of the system.

a) Reactor Coolant Volume Control

Reactor coolant volume control performed by the RCV [CVCS] is used to compensate minor leak of reactor coolant, expansion during heating from cold shutdown, and contraction of the primary coolant during cooling.

Make-up capability of the RCV [CVCS] should be sufficient to compensate leak from extremely small break whose equivalent diameter is equal to or smaller than 9.5mm.

b) Reactivity Control

RCV [CVCS] and REA [RBWMS] cooperate on regulation boron concentration in reactor coolant.

c) Reactor Coolant Water Chemical Control

The RCV [CVCS] controls the pH value, Li concentration, dissolved hydrogen concentration and dissolved oxygen concentration according to the primary coolant water chemistry control requirements.

d) Purification and Gas Removal

The RCV [CVCS] removes radioactive corrosion products and ionic fission products (via demineralizers), and provides letdown for fission gases removal (via TEP [CSTS] degasification unit) from the reactor coolant system, so as to maintain radioactive level of the system As Low As Reasonably Achievable (ALARA).

e) Seal Water Injection and Seal Leak Collection

The RCV [CVCS] should be designed to continuously supply cooled and purified seal water to shaft seal No. 1 of the RCP [RCS] pump and collect seal leak-off water from the shaft seal No. 1 of the RCP [RCS] pump.

f) Pressurizer Auxiliary Spray

While normal spray of the pressurizer is unavailable or insufficient, the RCV [CVCS] will provide the pressurizer with auxiliary spray to control the pressure of RCP [RCS].

g) Control the Pressure of RCP [RCS] when the pressurizer is water solid.

When the RCP [RCS] operates under single-phase water solid state, the RCV [CVCS] controls the pressure of the RCP [RCS] through high-pressure or low-pressure reducing valve.

h) Water Filling and Hydraulic Tests of RCP [RCS]

The RCV [CVCS] provides means for water filling, letdown, and hydraulic tests of the RCP [RCS] and provides the interface for the hydraulic test pump (RBS [EBS] emergency boration pump).

### 10.3.4 System Description

10.3.4.1 General System Description

The RCV [CVCS] consists of letdown, charging, RCP [RCS] pump seal injection and seal leak-off collection unit, coolant purification unit, volume control and hydrogen addition unit, and chemical dosing unit.

Letdown flows from the cross leg of RCP [RCS] Loop 2 to RCV [CVCS] via letdown line. Near the RCP [RCS] loop there are two isolation valves in series which are used for RCPB isolation. Letdown flow is primarily cooled by the regenerative heat exchanger and secondarily cooled by one of two parallel letdown heat exchangers. Then the letdown

flow is depressurized by the high-pressure reducing valve connected in series with the letdown heat exchanger.

Low-pressure letdown pipes link Residual Heat Removal (RHR) and RCV for continuous purification. When Safety Injection System (RIS [SIS]) operation in RHR mode. At this condition, the letdown flow rate is adjusted by the low-pressure control valve.

During normal operation, the letdown flow is routed to the purification unit. The purification unit consists of two parallel reactor coolant filters, two mixed bed demineralizers, an optional cation bed demineralizer, and two parallel resins trap filters. Reactor coolant filters remove particle impurities. Mixed bed demineralizers remove ionic impurities coming from corrosion and fission products. Cation bed demineralizer is operated intermittently to remove lithium or cesium ion. Resin trap filters capture resin fines coming from the demineralizers.

Then letdown flow will be sent to the volume control tank and hydrogen station after cooling, depressurization, demineralization and/or degasification.

Hydrogen station consists of jet pump, mixing pipe and gas separator. Hydrogen from gaseous phase of gas separator is injected to mixing pipe for mixture and dissolution by jet pump. Hydrogen bubbles insoluble in reactor coolant will be separated by gas separator and return to gaseous phase.

The charging pump takes suction from volume control tank and hydrogen station. If Volume Control Tank (VCT) level is very low or under anti-dilution condition, suction switches to the In-Containment Refueling Water Storage Tank (IRWST). Fluid from the outlet of charging pump is divided into charging flow, RCP [RCS] pump seal water injection flow, and jet flow of the hydrogen station. The charging flow runs through the shell side of the regenerative heat exchanger, is heated by the letdown flow at the tube side, and then flows into the cold leg of RCP [RCS] Loop 1. A three-way regulating valve is installed on the charging pipeline in the downstream of the regenerative heat exchanger. If necessary, this valve can provide auxiliary spray to pressurizer.

A part of the charging flow flows into Shaft seal No.1 of the RCP [RCS] pump via the seal injection line. A part of the seal injection water flows into RCP [RCS] and the rest is returned to volume control tank via the seal leak-off collection pipe.

The chemical dosing unit can inject chemical additives to the inlet of the charging pump.

10.3.4.2 Main Equipment

Main components are described as follows:

a) Charging Pump

Charging pumps are of the multi-stage centrifugal type. Two charging pumps are arranged in parallel and they share inlet and outlet lines. During normal operation, one charging pump is sufficient to meet the requirements for RCP [RCS] volume control,

chemical control, and boron concentration regulation while the other charging pump is on standby. During several normal operating modes such as reactor cooldown, two charging pumps can be used to meet the charging flow rate requirements when necessary. The charging pump will not execute safety functions.

b) Regenerative Heat Exchanger

The regenerative heat exchanger is a U-tube type heat exchanger; it is used to recover heat from the letdown flow to heat the charging flow. The letdown flow is at the tube side while the charging flow is at the shell side.

c) Letdown Heat Exchanger

The letdown heat exchangers are U-tube type heat exchangers too. The letdown flow runs through the tube side of the heat exchanger and component cooling water from the RRI [CCWS] running through the shell side cools the letdown flow to the temperature range acceptable for the downstream demineralizer and coolant degasification subsystem of the TEP [CSTS]. Each letdown heat exchanger can cool all the letdown flow that is primarily cooled by the regenerative heat exchanger. Normally one letdown heat exchanger is in-service and another is on standby.

d) High-pressure Reducing Valve

The high-pressure reducing valves are angle globe control valves downstream of the letdown heat exchangers. They are used to reduce the pressure of the letdown flow and to control the letdown flowrate to control the Pressurizer water level.

e) Volume Control Tank

The VCT is a stainless steel, vertical cylindrical vessel, used to compensate volume fluctuations of the reactor coolant under different operation conditions.

The VCT is connected to Gaseous Waste Treatment System (TEG [GWTS]) and Nitrogen Distribution System (SGN [NDS]). Under all normal operation modes, it always maintains nitrogen blanket. TEG [GWTS] continuously purges the gaseous phase space in the upper part of the VCT, so as to prevent hydrogen accumulation.

10.3.4.3 System Layout

The regenerative heat exchanger, letdown heat exchangers and high pressure reducing valves and associated letdown and charging pipelines connected with RCP [RCS] are situated in the Reactor Building (BRX); coolant purification unit components are arranged in the Nuclear Auxiliary Building (BNX), and the other parts of the RCV [CVCS] are situated in the Fuel Building (BFX).

### 10.3.5 Preliminary Design Substantiation

10.3.5.1 Compliance with Regulations

The RCV [CVCS] design is compliant with regulations described in sub-chapter 4.8.

10.3.5.2 Compliance with Safety Related Requirements

According to the principle described in sub-chapter 4.7, the compliance with requirements is described in table T-10.3-1.

a) Qualification

FC1 and FC2 equipment in the RCV [CVCS] will be qualified in accordance with the requirements described in sub-chapter 4.9.

b) Hazard Protection

The RCV [CVCS] is protected against external hazards mainly by the civil work. This system is located in BRX, BFX, and BNX. This is discussed further in chapter 18.

For internal hazards, FC1 and FC2 classified equipment of RCV [CVCS] is protected by physical separation. This is discussed further in chapter 19.

In case free hydrogen releases from the hydrogen station, abnormal hydrogen concentration will be detected so as to automatically isolate the hydrogen supply line.

10.3.5.3 Compliance with Testing Requirement

RCV [CVCS] will be subject to commissioning tests before being put into operation, so as to verify that its component performance meets the requirements and that the safety functions of the system are achievable.

### 10.3.6 Functional Diagram

Functional diagram of RCV [CVCS] is shown in F-10.3-1.

T-10.3-1 Compliance with requirements related to safety classification

| System features | Functional classification | Single failure | Physical and electrical separation | Emergency power supply | Periodic test | Seismic classification |
|---|---|---|---|---|---|---|
| RCPB isolation | FC1 | YES<br>two redundant isolation valves | YES | YES<br>EDG and UPS | YES | SSE1 |
| Containment isolation | FC1 | YES<br>two redundant isolation valves | YES<br>inside and outside containment | YES<br>EDG and UPS | YES | SSE1 |
| Anti-dilution protection | FC1 | YES<br>two redundant isolation valves | YES<br>inside and outside containment | YES<br>EDG and UPS | YES | SSE1 |
| Chemical addition | NC | NO | NO | NO | NO | NO |
| Other parts of RCV [CVCS] | FC3 | NO | NO | YES<br>EDG | YES | SSE2 |

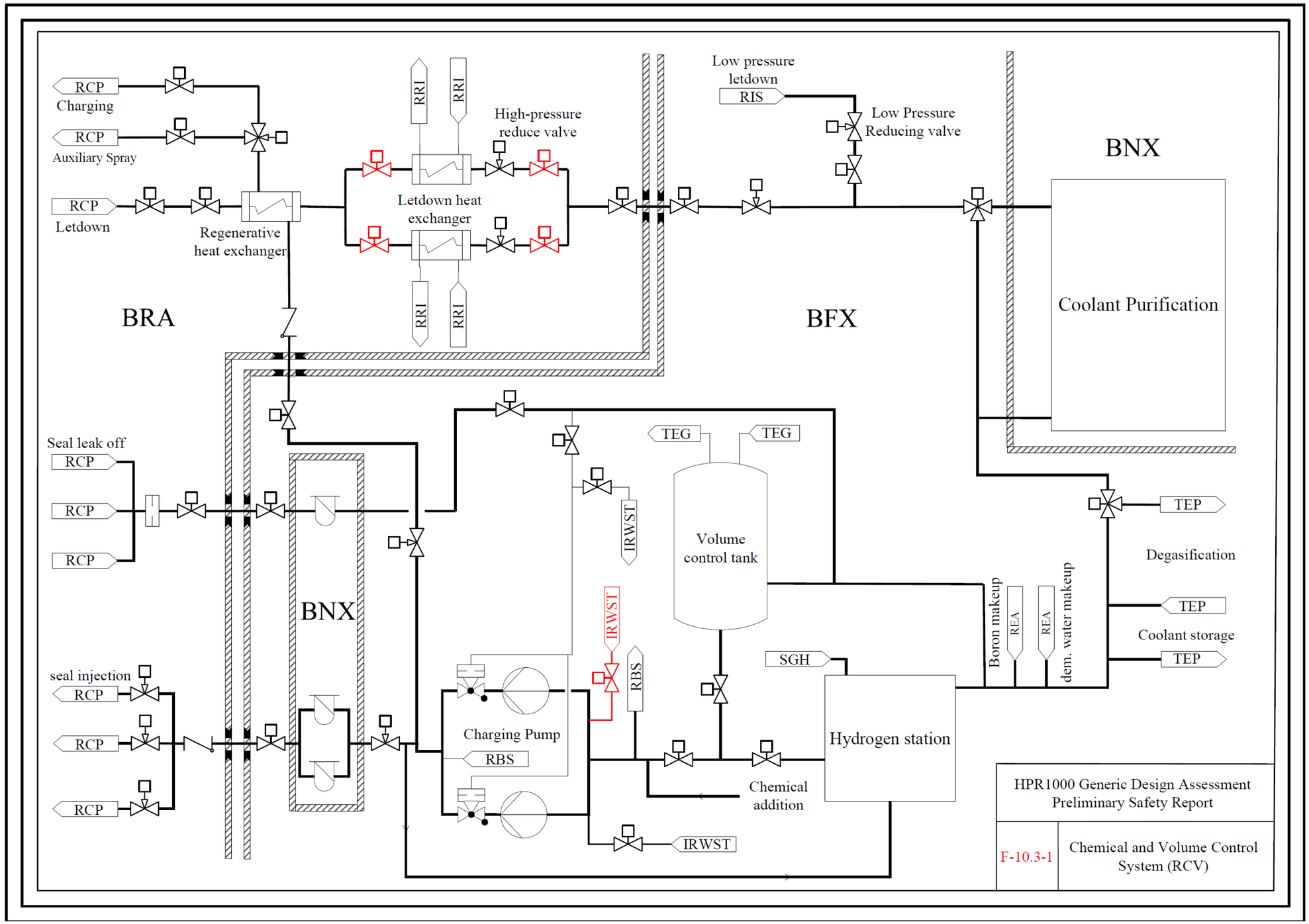
RCP
Charging
RCP
Auxiliary Spray
RCP
Letdown
Regenerative
heat exchanger
RRI
RRI
High-pressure
reduce valve
Letdown heat
exchanger
RRI
RRI
Low pressure
letdown
RIS
Low Pressure
Reducing valve
BNX
Coolant Purification
BRA
BFX
Seal leak off
RCP
RCP
RCP
BNX
TEG
TEG
IRWST
Volume
control tank
TEP
Degasification
TEP
Coolant storage
TEP
Boron makeup
REA
REA
dem. water makeup
seal injection
RCP
RCP
RCP
IRWST
RBS
SGH
Charging Pump
RBS
Chemical
addition
Hydrogen station
IRWST
HPR1000 Generic Design Assessment
Preliminary Safety Report
F-10.3-1
Chemical and Volume Control
System (RCV)

## 10.4 Reactor Boron and Water Makeup System (REA [RBWMS])

### 10.4.1 Safety Requirements

10.4.1.1 Safety Functions

a) Reactivity Control

The REA [RBWMS] controls the reactivity by adjusting RCP [RCS] boron concentration via the RCV [CVCS] during normal operation.

b) Residual Heat Removal

The REA [RBWMS] does not contribute to this function.

c) Confinement of Radioactive Substance

As the REA [RBWMS] is a system which contains radioactive products. Its pressure boundary should act as a barrier to the transfer of radioactive substance.

10.4.1.2 Safety Functional Requirements

a) Regulations Requirement

See sub-chapter 4.8.

b) Safety Related Requirements

1) Safety Classification

Safety classification principles are presented in sub-chapter 4.7.

2) Single Failure Criterion

Single failure criterion should be applied to the equipment which ensures FC1 and FC2 classified safety functions.

3) Seismic classification

Seismic classification principles presented in sub-chapter 4.7.6 should be applied.

4) Qualification

Qualification principles presented in sub-chapter 4.9 should be applied.

5) Emergency Power Supply

All the electrical equipment which ensures classified safety functions should be supplied by emergency power.

6) Hazard Protection

The REA [RBWMS] should be protected against internal hazards and external hazards in

accordance with chapter 18 and 19.

c) Testing

The functions of system should be demonstrated by commission tests.

Safety related components should be subject to periodic test.

10.4.1.3 Other Additional Requirements

To avoid crystallization, the temperature in the equipment and pipes containing the boric acid (4%) must be kept above 20℃ (higher than boric acid critical temperature).

**10.4.2 Role of the System**

10.4.2.1 Normal Conditions

The REA [RBWMS] is designed to perform the following functions:

a) Prepare boric acid solution.

b) Ensure filling and boron makeup to the RBS [EBS] tanks.

c) Ensure filling and boron makeup to the spent fuel pool and the IRWST via the PTR [FPCTS] with the correct concentration.

d) Store boric acid solution required for volume control and reactivity control under normal operation.

e) Make up boric acid solution with the same concentration with the coolant of the reactor coolant via the RCV [CVCS].

f) Make up boric acid solution or demineralized and deaerated water to the RCP [RCS] via the RCV [CVCS] to regulate boron concentration.

10.4.2.2 Fault Conditions

Under accident conditions, especially in case of:

- LOOP ;
- Anticipated Transient Without Scram (ATWS).

If available, REA [RBWMS] will operate in the same way as under normal operation conditions to provide the reactivity control and volume control.

**10.4.3 Design Basis**

The boric acid storage tank capacity shall be sufficient to permit one shutdown to cold shutdown, followed by a shutdown for refueling.

The boric acid and demineralized water makeup flow rates should meet the coolant volume control and reactor reactivity control requirements during normal operation.

### 10.4.4 System Description

10.4.4.1 General System Description

a) Boron Acid Mixing and Distribution

The boric acid mixing and distribution part of the REA [RBWMS] is composed of a boric acid mixing tank (with an electric agitator), a boric acid feed pump, a mechanical filter upstream of the pump and the associated pipes, valves and instruments.

Fresh boric acid is mixed in the boric acid mixing tank. Boric acid feed pump supplies boric acid to user systems as REA [RBWMS] boric acid storage tanks, RBS [EBS] tanks, spent fuel pool, IRWST, RIS [SIS] accumulators, etc. The flow rate is controlled by control valve.

b) Boric Acid Storage and Injection

The boric acid storage and injection unit consists of two trains. Each train is equipped with one boric acid storage tank and one boric acid transfer pump. A control valve is located downstream of each pump to control the flow rate of the boric acid solution injected into the RCV [CVCS].

The boron acid mixing tank provides initial feed to the boric acid storage tanks. After first feeding, the coolant treatment subsystem of the TEP [CSTS] provides recycled boric acid solution to the boric acid storage tanks.

c) Demineralized Water Injection

The demineralized water injection unit consists of two trains. Each train is equipped with a demineralized water injection pump. Inlets of the pumps connect to the demineralized water pipeline in the TEP [CSTS] and suction from the reactor coolant storage tanks which contain recycled demineralized water. A control valve is located downstream of each pump to control the flow rate of demineralized water injected into the RCV [CVCS].

10.4.4.2 Main Equipment

Main components of the REA [RBWMS] are described as follows:

a) Boric Acid Mixing Tank

Boric acid mixing tank is a vertical cylindrical vessel. At the head of the tank there is an agitator fixed that provides the mixing of the demineralized water with boric acid powder injected, and an inlet nozzle used to put in boric acid powder.

The boric acid mixing tank is used to prepare boric acid solution by dissolving "nuclear-grade" boric acid powder in preheated demineralized water to obtain boric acid solution required.

b) Boric Acid Feed Pump

The boric acid feed pump is a horizontal centrifugal pump, which provides boric acid solution from boric acid mixing tanks to different users.

c) Boric Acid Storage Tank

The boric acid storage tanks are vertical cylindrical vessels. The gaseous phase at the top of the tanks is connected to the TEG [GWTS], so as to prevent the boric acid solution from re-oxygenation. During normal operation, the boric acid storage tanks collects 4% boric acid solution recycled in the TEP [CSTS] and provides it to the RCP [RCS] via the RCV [CVCS] according to the volume and reactivity control requirements.

d) Boric Acid Injection Pump

The boric acid injection pumps are of horizontal centrifugal type, used to supply the necessary flow of boric acid to the RCV [CVCS].

e) Demineralized Water Injection Pump

The demineralized water injection pumps are of horizontal centrifugal type, used to deliver the required amount of demineralized water to the RCV [CVCS].

10.4.4.3 System Layout

The REA [RBWMS] is arranged in the BNX.

**10.4.5 Preliminary Design Substantiation**

10.4.5.1 Compliance with Regulations

The REA [RBWMS] design is in compliance with regulations described in sub-chapter 4.8.

10.4.5.2 Compliance with Safety Related Requirements

a) Safety Classification

The compliance with requirements related to safety classification is described in table T-10.4-1.

b) Single Failure Criterion

REA [RBWMS] is not a safeguard system. Single failure criterion is not applied to the system. However, the boric acid injection unit and demineralized water injection unit consist of two redundant chains to ensure the operation reliability.

c) Seismic Classification

There is no requirement to protect the REA [RBWMS] against Safe Shutdown Earthquake (SSE).

d) Qualification

REA [RBWMS] is not a safeguard system. Qualification requirement is not applied to the system.

e) Emergency Power Supply

To ensure availability, boric acid injection pumps, demineralized water injection pumps, and electric valves on boric acid and demineralized water make-up pipelines are supplied by emergency power.

f) Hazard Protection

As a system located in the BNX, the hazard protection requirements described in chapter 18 and 19 are not applied to the REA [RBWMS].

10.4.5.3 Compliance with Testing Requirement

The REA [RBWMS] will be subject to commissioning tests before operation, so as to verify that its component performance meets the requirements of the system.

Periodic test is not required for the REA [RBWMS].

### 10.4.6 Functional Diagram

Functional diagram of REA [RBWMS] is shown in F-10.4-1.

T-10.4-1 Compliance with requirements related to safety classification

| System Features | Functional Classification | Single Failure | Physical and Electrical Separation | Emergency Power Supply | Periodical Test | Seismic Classification |
|---|---|---|---|---|---|---|
| Boron Acid Mixing and Distribution | NC | NO | NO | NO | NO | NO |
| Boric Acid Storage and Injection | FC3 | NO | NO | YES | NO | NO |
| Demineralized Water Injection | FC3 | NO | NO | YES | NO | NO |

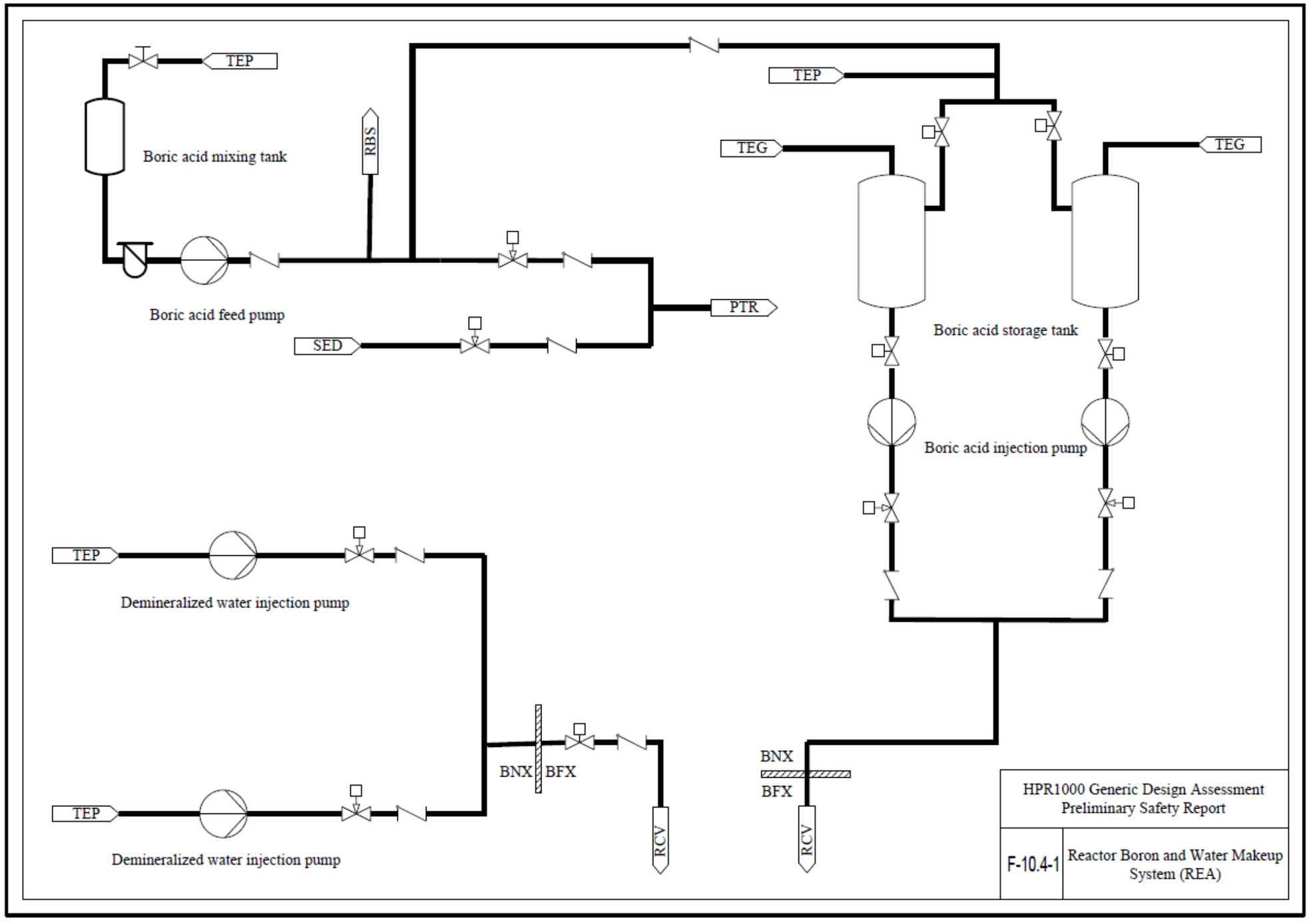
TEP
Boric acid mixing tank
RBS
TEP
TEG
TEG
Boric acid feed pump
PTR
SED
Boric acid storage tank
Boric acid injection pump
TEP
Demineralized water injection pump
BNX
BFX
RCV
BNX
BFX
RCV
TEP
Demineralized water injection pump
HPR1000 Generic Design Assessment
Preliminary Safety Report
F-10.4-1
Reactor Boron and Water Makeup System (REA)

## 10.5 Coolant Storage and Treatment System (TEP [CSTS])

### 10.5.1 Safety Requirements

10.5.1.1 Safety Functions

a) Reactivity Control

The TEP [CSTS] does not contribute to this function.

b) Residual Heat Removal

The TEP [CSTS] does not contribute to this function.

c) Confinement of Radioactive Substance

The TEP [CSTS] does not contribute to this safety function directly. As the TEP [CSTS] is a system which contains radioactive products, its pressure boundary should act as a barrier to the transfer of radioactive substance.

10.5.1.2 Safety Functional Requirements

a) Regulations Requirement

See sub-chapter 4.8.

b) Safety Related Requirements

1) Safety Classification

Safety classification principles are presented in sub-chapter 4.7.

2) Single Failure Criterion

Single failure criterion should be applied to the equipment which ensures FC1 and FC2 classified safety functions.

3) Seismic Classification

Seismic classification principles presented in sub-chapter 4.7.6 should be applied.

4) Qualification

Qualification principles presented in sub-chapter 4.9 should be applied.

5) Emergency Power Supply

All the electrical equipment which ensure safety functions should be powered by emergency power which is safety classified.

6) Hazard Protection

The TEP [CSTS] should be protected against internal hazards and external hazards in accordance with chapter 18 and 19.

c) Testing

The functions of system should be demonstrated by commission tests.

Safety related components should be subject to periodic test.

### 10.5.2 Role of the System

10.5.2.1 Normal Conditions

The TEP [CSTS] receives and stores reusable primary coolant during normal operation of Nuclear Power Plant (NPP). It prepares demineralized water and 7000mg/kg boric acid solution via the evaporation process and transfers them to storage tanks for reuse. It

reduces radioactivity level in the primary coolant through the degasification process.

The TEP [CSTS] is capable of the following operational functions:

1) Receive and store coolant discharged from the RCP [RCS] via the RCV [CVCS] due to burnup, load change and startup and shutdown transients during reactor normal operation;
2) Receive and store recyclable reactor coolant drainage and leakage collected by the Nuclear Island Vent and Drain System (RPE [VDS]);
3) Remove solid and ionized impurities, so as to reduce the radioactivity of the reactor coolant to be treated;
4) Separate reactor coolant that is temporarily stored in the TEP [CSTS] into 7000mg/kg boric acid solution and demineralized water for reuse;
5) Degasify the distillate before it is discharged from the NPP (in the case of high tritium concentration) and degasify the demineralized water makeup from the NI Dematerialized Water Distribution System (SED [DWDS(NI)]) for discharge compensation;
6) Remove the radioactive fission gases, hydrogen or oxygen from reactor coolant if needed.

10.5.2.2 Fault Conditions

The TEP [CSTS] is not a safeguard system, and is not designed to mitigate consequences of DBC3~DBC4 events and DEC events.

### 10.5.3 Design Basis

a) Reactor Coolant Storage

The reactor coolant storage capacity should meet:

1) Storage requirements of demineralized water used for the reactivity control and volume control of the RCP [RCS];
2) Storage requirements of excess coolant discharged from the RCV [CVCS] during inventory change, boration or dilution of reactor coolant.

Based on the fact that maximum demineralized water is required for reactor returning from cold shutdown state to full-power operation without delay at the end of fuel cycle and considering the coolant discharge at transient state of startup (expansion and dilution), maximum storage capacity is determined.

b) Coolant Degasification

During shutdowns and start-ups, the coolant degasification unit operates intermittently to remove the fission gas or to reduce the concentration of hydrogen or oxygen. The degasification capability should be consistent with the letdown flow of the RCV [CVCS].

c) Coolant Treatment

The recyclable coolant discharge, leakage and drainage storage temporary in the TEP [CSTS] will be recycled into 7000mg/kg boric acid solution and demineralized water through evaporation process. The coolant treatment capability should fulfill the coolant recycling requirement.

d) Condensate Degasification

Condensate degasification unit is designed to degasify the distillate, so as to meet the

reuse or discharge requirements.

### 10.5.4 System Description

10.5.4.1 General System Description

The TEP [CSTS] is divided into following subsystems:

- Coolant storage and supply subsystem (TEP1);
- Coolant purification subsystem (TEP2);
- Coolant treatment subsystem (TEP3, 5 and 6);
- Coolant degasification subsystem (TEP4).

a) Coolant Storage and Supply Subsystem

Coolant storage and supply subsystem is mainly comprised of the following:

- Six coolant storage tanks;
- One borated water pipeline;
- One demineralized water pipeline.

Each coolant storage tank is connected to the borated water pipeline and demineralized water pipeline through isolation valve. During normal operation of NPP, one coolant storage tank is permanently connected to borated water pipeline and another coolant storage tank is permanently connected to demineralized water pipeline. Therefore, borated water and demineralized water can be received and supplied at the same time.

Coolant storage and supply subsystem is continuously flushed by Gaseous Waste Treatment System (TEG [GWTS]) in order to limit the hydrogen gas concentration.

b) Coolant Purification Subsystem

Coolant purification subsystem consists of the following:

- Two make-up pumps of boric acid distillation tower;
- One mixed bed demineralizer;
- One cartridge filter (resin trapper).

Mixed bed demineralizer and downstream resin trapper are installed between the coolant storage and supply subsystem (TEP1) and coolant treatment subsystem (TEP3, 5 and 6).

c) Coolant Treatment Subsystem

Coolant treatment subsystem consists of the following:

- One evaporation unit:
- One condensate degasification unit;

TEP3, 5 and 6 subsystem is used to separate reactor coolant into demineralized water and boric acid solution. On the basis of improving system availability, redundancy is considered for all important active components.

d) Coolant Degasification Subsystem

Coolant degasification subsystem mainly consists of the following:

- One coolant degasification unit;

The degasification vacuum pump will depressurize the coolant when its temperature reaches the boiling point of 50℃. Meanwhile, vacuum pump is used to extract gases evolved out of the degasification tower.

10.5.4.2 Main Equipment

Main equipment is described as follows:

a) Coolant Storage Tanks

Coolant storage tanks are vertical cylindrical vessels used to receive reusable primary coolant or demineralized water (distillate) from the coolant treatment subsystem.

b) Evaporator

Evaporator in evaporation unit is a packed column which separates reusable primary coolant into demineralized water and 7000mg/kg boric acid solution, which is returned to the REA [RBWMS] for reuse.

c) Degasification Columns

Degasification Columns of coolant and condensate degasification units are packed column used to degasify the liquid to be treatment, so as to reduce its radioactivity.

TEP [CSTS] is equipped with multiple centrifugal pumps to provide drive required for fluid running in the system.

d) Mixed Bed Demineralizer

The mixed bed demineralizer in coolant purification subsystem is a cylindrical pressure vessel with hemispherical heads. It is filled with anion and cation resins to remove ionic and solved impurities of coolant.

e) Pumps and Compressors

The TEP [CSTS] is equipped with multiple centrifugal pumps to provide drive required for fluid running in the system.

Vapour compressor is of the rotary compressor type of sufficient compression ratio to produce enough heat, which maintains the evaporator sufficient evaporation.

Vacuum pump is a liquid ring vacuum pump which provides coolant degasification column with required operation pressure (negative pressure), so that the coolant will evaporate at the temperature near letdown temperature.

f) Heat Exchangers

TEP [CSTS] is equipped with multiple heat exchangers to recover system heat and cool fluid. The heat exchangers are of tube-shell type.

10.5.4.3 System Layout

TEP [CSTS] is arranged in the BNX.

### 10.5.5 Preliminary Design Substantiation

10.5.5.1 Compliance with Regulations

The TEP [CSTS] design is compliance with Regulations described in sub-chapter 4.8.

10.5.5.2 Compliance with Safety Related Requirements

According to the principle described in sub-chapter 4.7, the compliance with requirements is described in table T-10.5-1.

1) Qualification

The TEP [CSTS] is not a safeguard system. Qualification requirement is not applied to the system.

2) Hazard Protection

As a system located in the BNX, the hazard protection requirements described in chapter 18 and 19 are not applied to the TEP [CSTS].

10.5.5.3 Compliance with Testing Requirement

TEP [CSTS] will be subject to commissioning tests before being put into operation, so as to verify that its component performance meets the requirements.

TEP [CSTS] is designed to be capable of monitoring different components during normal operation, so as to ensure that all functions of the system can be correctly executed.

Periodic test is not required for the TEP [CSTS].

### 10.5.6 Functional Diagram

Functional diagram of TEP [CSTS] is shown in F-10.5-1.

T-10.5-1 Compliance with requirements related to safety classification

| System Features | Functional Classification | Single Failure | Physical and Electrical Separation | Emergency Power Supply | Periodical Test | Seismic Classification |
|---|---|---|---|---|---|---|
| TEP1 | FC3 | NO | NO | NO | NO | NO |
| TEP2 | FC3 | NO | NO | NO | NO | NO |
| TEP3、5、6 | FC3 | NO | NO | NO | NO | NO |
| TEP4 | FC3 | NO | NO | NO | NO | NO |

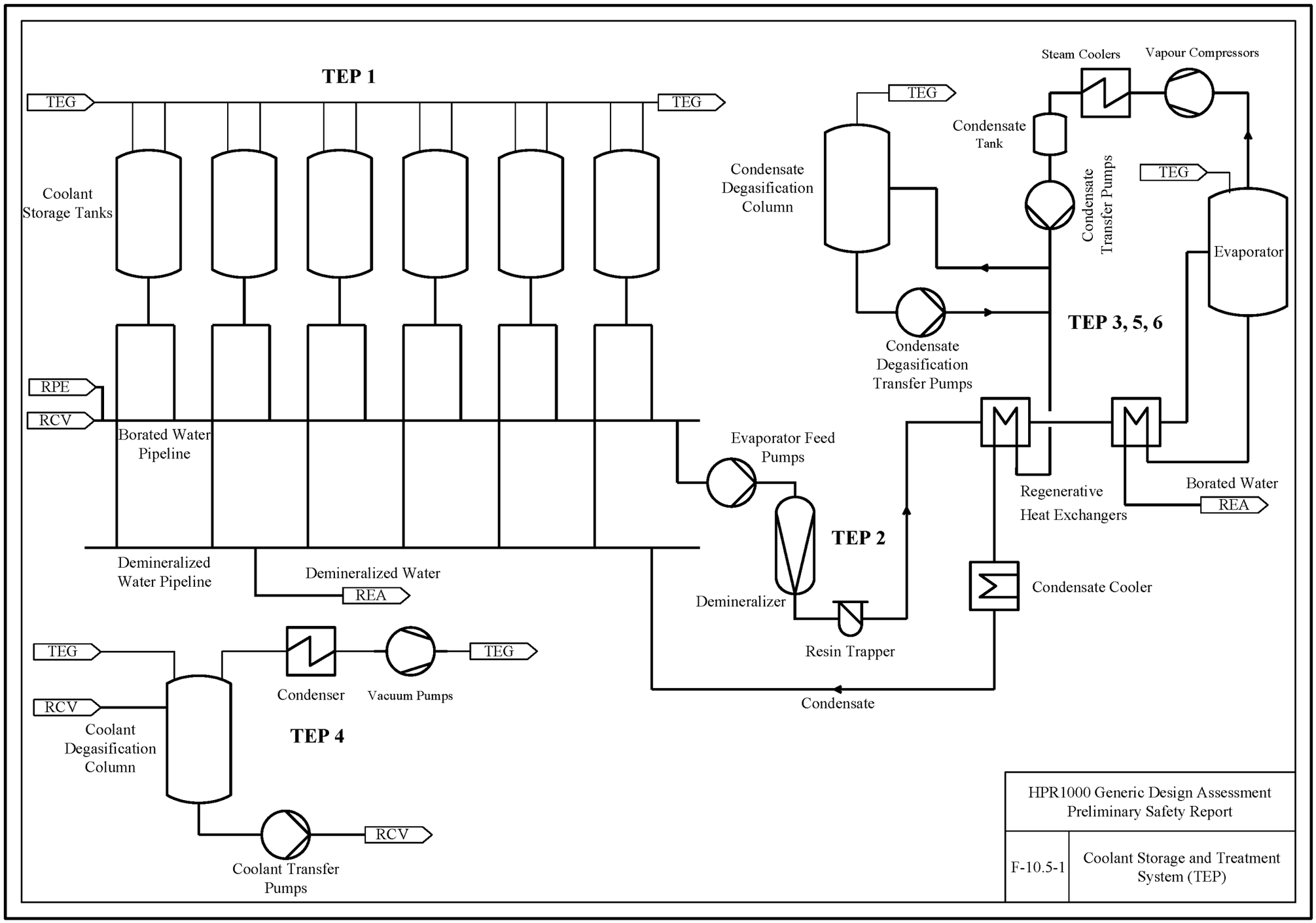
TEP 1
TEG
TEG
Coolant Storage Tanks
RPE
RCV
Borated Water Pipeline
Demineralized Water Pipeline
Demineralized Water
REA
Condensate Degasification Column
TEG
Steam Coolers
Vapour Compressors
Condensate Tank
Condensate Transfer Pumps
TEG
Evaporator
TEP 3, 5, 6
Condensate Degasification Transfer Pumps
Evaporator Feed Pumps
TEP 2
Demineralizer
Resin Trapper
Regenerative Heat Exchangers
Borated Water
REA
Condensate Cooler
Condensate
TEG
TEG
RCV
Coolant Degasification Column
Condenser
Vacuum Pumps
TEP 4
RCV
Coolant Transfer Pumps
HPR1000 Generic Design Assessment
Preliminary Safety Report
F-10.5-1
Coolant Storage and Treatment System (TEP)

## 10.6 Nuclear Sampling System (REN [NSS])

### 10.6.1 Safety Requirements

10.6.1.1 Safety Functions

a) Reactivity Control

The REN [NSS] contributes to reactivity control by providing the boron concentration surveillance of the primary coolant.

b) Residual Heat Removal

The REN [NSS] does not perform the safety function of residual heat removal.

c) Confinement of Radioactive Substance

The REN [NSS] performs the safety function of containment isolation, RCPB isolation and providing secondary samples to the Plant Radiation Monitoring System (KRT [PRMS]) which helps identify any leakage from the primary to secondary circuits.

10.6.1.2 Safety Functional Requirements

a) Regulations Requirement

See sub-chapter 4.8.

b) Safety Related Requirements

1) Safety Classification

Safety classification principles are presented in sub-chapter 4.7.

2) Single Failure Criterion

Single failure criterion should be applied to the equipment which ensures FC1 and FC2 classified safety functions.

3) Seismic Classification

Seismic classification principles presented in sub-chapter 4.7.6 should be applied.

4) Qualification

Qualification principles presented in sub-chapter 4.9 should be applied.

5) Emergency Power Supply

All the electrical equipment which ensures safety functions should be supplied by emergency power.

6) Hazard Protection

The REN [NSS] should be protected against internal hazards and external hazards in accordance with chapter 18 and 19.

c) Testing

The functions of system should be demonstrated by commission tests.

Safety related components should be subject to periodic test.

### 10.6.2 Role of the System

10.6.2.1 Normal Conditions

The REN [NSS] is designed to provide centralized monitoring for determining the

physical or chemical characteristics via on-line devices and grab samples from the following locations:

a) Primary coolant system;

b) Steam generator secondary side;

c) Liquid waste treatment systems;

d) Primary auxiliary systems;

10.6.2.2 Fault Conditions

The REN [NSS] is not designed to mitigate consequences during DBC and DEC accident conditions. However, the REN [NSS] can grab reactor coolant samples during post-accident conditions while a risk analysis has to be performed by the operators in order to decide their reopening of sampling lines in long term (when the radioprotection conditions are allowed to make the samples).

### 10.6.3 Design Basis

10.6.3.1 Safety Design Basis

Sampling pipelines that penetrate the containment should be isolated automatically when receiving containment isolation signal.

The valves on the sampling lines connected to the RCP [RCS] should be isolated to maintain integrity of RCPB if required.

10.6.3.2 Operation Design Basis

The samples from different systems should be representative.

The diameter of sampling pipeline from the RCP [RCS] should be as small as possible so as to limit coolant leakage in case of pipeline break.

The pressure, temperature, and flow rate of samples should meet the requirements of analytical instruments and manual sampling.

The samples should be recycled separately according to their sources so as to reduce liquid wastes release.

### 10.6.4 System Description

10.6.4.1 General System Description

The REN [NSS] consists of following sub-systems:

a) Primary Sampling System

The primary sampling system obtains liquid and gaseous samples from the primary coolant system, primary auxiliary systems, liquid and gaseous waste treatment systems, in order to determine the physical and chemical characteristics of these samples by measurements and analyses. These samples are categorized as active liquid samples, slightly active liquid samples and gaseous samples.

b) Secondary Sampling System

The secondary sampling system collects liquid samples from the SGs and the Steam Generator Blowdown System (APG [SGBS]) in order to perform water quality and radioactive analyses.

10.6.4.2 Main Equipment

The main components of REN [NSS] are: heat exchangers, pressure reducing valves, sampling glove boxes, sampling back feed pumps and on-line monitoring instruments (for primary side: coolant boron concentration, dissolved hydrogen concentration , dissolved oxygen concentration; for secondary side: Na+, pH and conductivity).

10.6.4.3 System Layout

Most of the REN [NSS] components are situated in the BNX, except high temperature heat exchangers, high pressure reducing valves which are situated in the BFX.

### 10.6.5 Preliminary Design Substantiation

10.6.5.1 Compliance with Regulations

The REN [NSS] design is in compliance with regulations described in sub-chapter 4.8.

10.6.5.2 Compliance with Safety Related Requirements

According to the principle described in sub-chapter 4.7, the compliance with requirements is described in table T-10.6-1.

a) Qualification

FC1 and FC2 equipment in the REN [NSS] will be qualified in accordance with the requirements described in sub-chapter 4.9.

b) Hazard Protection

The REN [NSS] is protected against external hazards by the civil work. chapter 18 describes external hazards.

For internal hazards, FC1 and FC2 classified equipment of REN [NSS] is protected by physical separation. Chapter 19 describes internal hazards.

10.6.5.3 Compliance with Testing Requirement

The REN [NSS] will be subject to commissioning tests before commercial operation, so as to verify that its components meet the performance requirements and that the safety functions of the system are achievable.

In order to ensure that safety functions of the system can be correctly executed, periodic tests on components to demonstrate they can deliver their safety functions will be performed.

### 10.6.6 Functional Diagram

Functional diagram of REN [NSS] is shown in F-10.6-1 to F-10.6-2.

T-10.6-1 Compliance with requirements related to safety classification

| System Features | Functional Classification | Single Failure | Physical and Electrical Separation | Emergency Power Supply | Periodical Test | Seismic Classification |
|---|---|---|---|---|---|---|
| RCPB isolation | FC2 | YES | YES | YES<br>EDG | YES | SSE1 |
| Containment isolation | FC1 | YES<br>two redundant isolation valves | YES<br>inside and outside containment | YES<br>EDG and UPS | YES | SSE1 |
| SG sampling（to the KRT [PRMS]） | FC2 | YES | YES | YES<br>EDG | YES | SSE1 |
| Other parts of REN [NSS] | FC3 | NO | NO | NO | NO | NO |

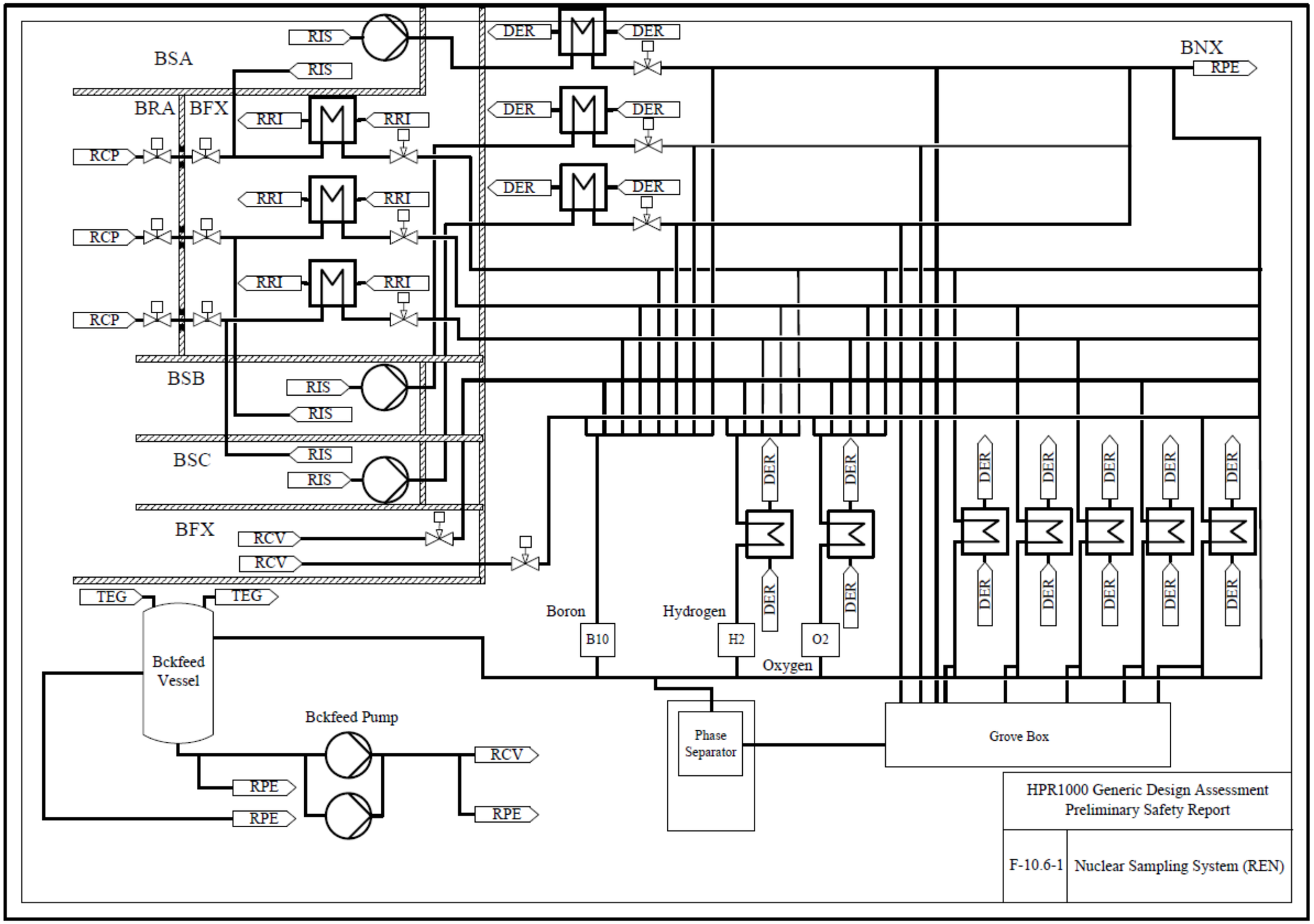
BSA
BRA
BFX
BSB
BSC
BFX
RIS
RRI
RCP
RCV
TEG
DER
BNX
RPE
Boron
B10
Hydrogen
H2
O2
Oxygen
Bckfeed Vessel
Bckfeed Pump
Phase Separator
Grove Box
HPR1000 Generic Design Assessment
Preliminary Safety Report
F-10.6-1
Nuclear Sampling System (REN)

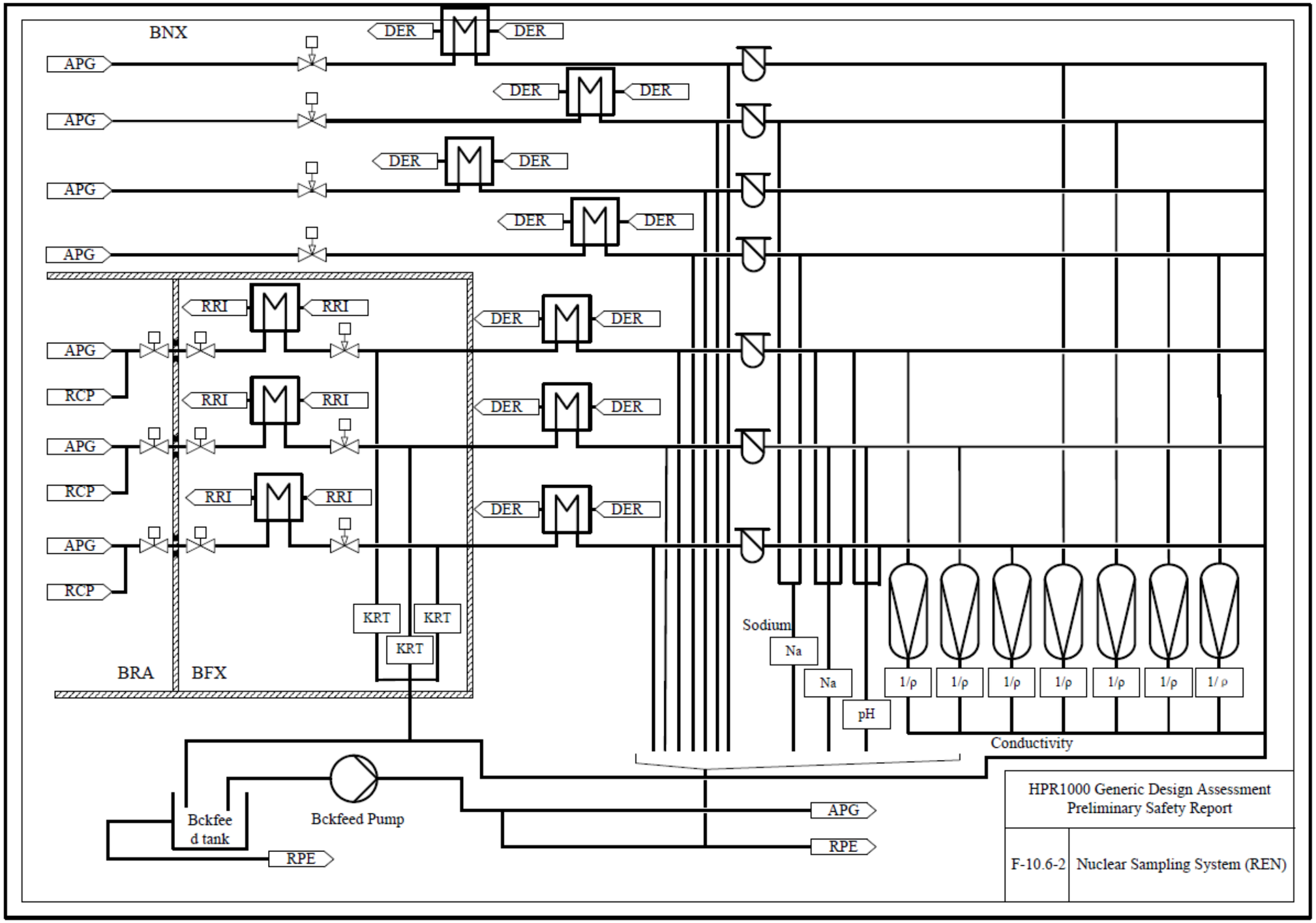
BNX
DER
M
APG
RRI
RCP
KRT
BRA
BFX
Sodium
Na
pH
1/ρ
Conductivity
Bckfeed tank
Bckfeed Pump
RPE
HPR1000 Generic Design Assessment
Preliminary Safety Report
F-10.6-2
Nuclear Sampling System (REN)

## 10.7 Fuel Handling and Storage System (PMC)

### 10.7.1 Safety Requirements

10.7.1.1 Safety Functions

a) Reactivity Control

PMC [FHSS] does not directly participate in the fulfilment of core reactivity control, but it should maintain the fuel assembly in a subcritical state when it is transferred or stored.

b) Residual Heat Removal

PMC [FHSS] should allow sufficient cooling of the irradiated fuel assembly when it is transferred or stored.

c) Confinement of Radioactive Substance

PMC [FHSS] should maintain the fuel cladding integrity when it is transferred.

In case of power operation, the PMC [FHSS] transfer tube and its seals directly take part in the reactor containment isolation.

10.7.1.2 Safety Functional Requirements

a) Regulations Requirement

See sub-chapter 4.8.

b) Safety Related Requirements

1) Safety Classification

Safety classification principles are presented in sub-chapter 4.7.

2) Single Failure Criterion

Single failure criterion presented in sub-chapter 4.7 should be applied.

3) Seismic Classification

Seismic classification principles presented in sub-chapter 4.7.6 should be applied.

4) Qualification

Qualification principles presented in sub-chapter 4.9 should be applied.

5) Emergency Power Supply

Emergency power supply principles presented in sub-chapter 4.7 should be applied.

6) Hazard Protection

PMC [FHSS] must be protected against applicable internal or external hazards in accordance with chapter 19 and 18 respectively.

c) Requirements related to Examination, Maintenance and Testing

1) Examination

In-service inspection should be performed on fuel handling equipment according to the Operating, Maintenance and Repair Manual of each item of equipment.

2) Maintenance

The fuel handling equipment should be designed for minimal maintenance and repair, and wear components should be easily and rapidly removable and adjustable.

3) Testing

Refuelling machine is subject to periodic test.

Pre-operational and initial start-up tests should be performed to ensure that the fuel handling and storage equipment operates as designed.

10.7.1.3 Other Additional Requirements

Other additional requirements for PMC [FHSS] are as follows:

a) PMC [FHSS] is designed to handle one fuel assembly at a time.

b) PMC [FHSS] is designed to minimize the risk of fuel assembly dropping or impact which might damage, even in case of earthquake or loss of electrical power.

c) PMC [FHSS] is designed to handle irradiated fuel assembly under water with adequate biological shielding protection.

d) PMC [FHSS] is designed to facilitate the quality monitoring of the fuel assembly, and limit the risk of placing in the wrong position.

e) Spent fuel assemblies are always stored under water.

### 10.7.2 Role of the System

10.7.2.1 Normal Conditions

PMC [FHSS] is designed for the following major functions:

- Admission, inspection and storage of the new assemblies;
- Fuel loading and unloading in reactor core;
- Inspection and storage of the irradiated assemblies;
- Storage of defective fuel assemblies and Rod Cluster Control Assembly (RCCA);
- Rearrangement of core components, namely RCCA, Thimble Plug Assembly (TPA) and neutron source assembly;
- Loading spent fuel assemblies into spent fuel casks for delivery;
- Lighting for underwater fuel handling;
- Handling control rod drive shafts and handling irradiation surveillance capsule and specimen access plug with the help of special tools.

10.7.2.2 Fault Conditions

The PMC [FHSS] is not designed to mitigate consequences of DBC2~4 events and DEC events.

### 10.7.3 Design Basis

10.7.3.1 Underwater Fuel Storage

The spent fuel pool and the underwater fuel storage racks have sufficient capacity to contain all spent fuel assemblies produced by one reactor within at least 10 years, plus a full core in the event of a forced unloading.

The underwater fuel storage racks should be designed to allow free flow of the pool water so that assemblies are cooled and that criticality is precluded. The array pitches and the permanent neutron absorber shields should be such that the $K_{eff}$ must not exceed 0.95

including all uncertainties and assuming flooding with unborated water.

The underwater fuel storage also provides protection of personnel against radiation and specific cells for storage of defective fuel assembly and RCCA.

The spent fuel pool and underwater fuel storage racks are designed to prevent fuel damage due to a heavy dropped object (e.g. spent fuel cask) during handling operations close to or within the spent fuel pool.

Design of PMC [FHSS] is such that no heavy load can be handled above the underwater fuel storage area.

Both the spent fuel pool and underwater fuel storage racks are designed to maintain their integrity (including leak-tightness) when exposed to loads due to SSE.

The design of the underwater fuel storage racks precludes the placing of more than one fuel assembly in a single storage cell or putting or jamming an assembly between two storage cells.

The design of the underwater fuel storage racks precludes geometry changes due to changes in ambient conditions or due to operating effects. The design prevents tipping, and appropriate provisions prevent any unplanned movement of the fuel or the racks.

10.7.3.2 Dry Fuel Storage

Prevention of criticality in the dry fuel storage is accomplished by physical measures and appropriate geometrical configuration. The centre-to-centre spacing of dry fuel storage racks is such that the $K_{eff}$ does not exceed 0.98 for new fuel of the highest anticipated enrichment assuming the optimum physically envisaged moderation conditions (i.e. new fuel is submerged in pure water ($1.0g/cm^3$)).

During storage, new fuel assemblies are protected from falling objects, such as tools used during handling operations.

No water piping is permitted to pass through the new fuel storage area.

The design of dry fuel storage racks precludes the placement of more than one fuel assembly in a single storage cell or putting or jamming an assembly between two storage cells.

The design of dry fuel storage racks precludes geometry changes due to changes in ambient conditions caused by operating effects. The design prevents tipping, and there are appropriate provisions to prevent any unplanned movement of the fuel assemblies or the racks.

Flammable products are not stored near new fuel assemblies, to avoid excessive fuel temperature in case of fire.

10.7.3.3 Fuel Handling System

The fuel handling system is designed to minimize the risks of dropping or damaging fuel during transport from one location to another. Equipment used to transfer or lift fuel assemblies is provided with automatic braking or stopping devices to avoid inadvertent movement following loss of electrical power.

The fuel handling equipment both inside and outside the containment can be stopped on demand and can hold the fuel weight when submitted to SSE.

All fuel handling operations, including fuel transfer-related operations, are performed in

such a way to ensure that the personnel are protected against radiation and that fuel does not overheat.

The evaluation of radiological consequences of a fuel handling accident considers the overall equipment layout (structures, systems and components) in order to assure safety and protection of the public.

The fuel transfer facility is designed to minimize the risks of fouling or jamming. Once these conditions occur, the design permits manual removal of the fuel.

The irradiated fuel assemblies are handled under a sufficient depth of water to ensure adequate biological protection.

### 10.7.4 System Description

10.7.4.1 General System Description

PMC [FHSS] is designed to fulfil the task of fuel loading and unloading in reactor core, dealing with fuel assemblies and core components, namely RCCA, TPA and neutron source assembly, which includes a series of operations starting when the new assemblies arrive and ending before the delivery of the spent fuel shipping cask.

According to the role of PMC [FHSS] in normal conditions, the main functions of PMC [FHSS] can be divided into three groups:

a) Admission, inspection and storage of the new assemblies;

b) Fuel loading and unloading in reactor core, and storage of the spent fuel assemblies;

c) Loading spent fuel assemblies into casks for delivery.

10.7.4.2 Main Equipment

In accordance with the three groups of functions stated above, the main equipment of PMC [FHSS] is described in table T-10.7-1.

10.7.4.3 System Layout

All components of PMC [FHSS] are situated within the BRX and BFX.

### 10.7.5 Preliminary Design Substantiation

10.7.5.1 Compliance with Regulations

Design of PMC [FHSS] is compliant with Regulations listed as follows:

a) GB/T 3811-2008, Design rules for cranes;

b) NB/T 20234-2013, Design rules for cranes at Nuclear Power Plants;

c) RCC-M, Design and Building Rules for Mechanical Equipment for Pressurized Water Reactor Nuclear Islands, Version 2007;

d) RCC-E, Design and Building Rules for Electric Equipment for Pressurized Water Reactor Nuclear Islands, Version 2005;

10.7.5.2 Compliance with Safety Related Requirements

a) Safety Classification

According to the principles described in sub-chapter 4.7, and considering function of each item of equipment, the safety classifications of equipment are as follows:

- New Fuel Storage Racks: F-SC3,

- Underwater Fuel Storage Racks: F-SC1,
- Transfer Tube: F-SC1,
- Blind Flange: F-SC1,
- Gate Valve: F-SC1.

Other PMC equipment listed in table T-10.7-1 are not related to safety function.

b) Single Failure Criterion

Fuel handling equipment is designed to preclude fuel damage due to a single failure or a single human error occurring during fuel transfer, and redundant design is applied to hoisting mechanism and electric protective devices.

c) Seismic Classification

According to the principles described in sub-chapter 4.7.6, the seismic classifications of main equipment are as follows:

1) New fuel storage racks, underwater fuel storage racks, refuelling machine, spent fuel pool crane, fuel transfer facility, transfer tube, blind flange and gate valve are classified SSE1;

2) Auxiliary crane, new fuel elevator, off-line sipping test facility and underwater lights are classified SSE2.

d) Qualification

According to the principles described in sub-chapter 4.9, equipment of PMC [FHSS] does not need to be qualified.

e) Emergency Power Supply

Equipment that ensures safety functions is non-electric, and stopping of the electrical equipment due to loss of power will not result in loss of safety because the fuel can be transferred to a safe position manually; so emergency power supply is not necessary for PMC [FHSS].

f) Hazard Protection

PMC [FHSS] is protected against internal hazards by equipment design, layout requirements, physical measures, working area limitation, supervision and control, etc.

PMC [FHSS] is protected against external hazards mainly by the civil work and seismic design.

10.7.5.3 Compliance with Examination, Maintenance and Testing Requirement

a) Examination and Maintenance

Fuel handling equipment is provided with easily access and detachable parts wherever possible to facilitate examinations and repairs which may prove necessary.

b) Testing

1) Periodic Testing

Refuelling machine should be checked before each reactor core fuel unloading campaign.

2) Pre-operational and Initial Start-up Testing

Each item of equipment should perform on-site testing immediately after installation.

T-10.7-1 Main Equipment of PMC [FHSS]

| Group | Equipment | Function |
|---|---|---|
| Admission, Inspection and Storage of the New Fuel Assemblies | Auxiliary Crane | Handling new fuel container and new fuel assembly in air;<br>Handling new RCCA in its inspection test. |
| | New Fuel Storage Racks | Storing new assemblies in dry condition;<br>Offering support for inspection test of the new RCCA. |
| | New Fuel Elevator | Lowering new assemblies to the bottom of the spent fuel pool. |
| Fuel Loading and Unloading in Reactor Core, and Storage of the Spent Fuel Assemblies | Refuelling Machine | Transferring assemblies within reactor cavity and internals storage compartment in BRX. |
| | Fuel Transfer Facility | Transferring assemblies between BRX and BFX. |
| | Transfer Tube | Taking part in the reactor containment isolation in case of power operation;<br>Connecting BRX to BFX in case of refuelling. |
| | Blind Flange | Sealing the transfer tube and isolating the reactor containment in case of power operation. |
| | Gate Valve | Sealing the transfer tube and isolating BFX from BRX. |
| | Spent Fuel Pool Crane | Transferring assemblies within spent fuel pool, transfer compartment and cask loading pit in BFX;<br>Rearranging of core components within spent fuel pool in BFX. |
| | Underwater Fuel Storage Racks | Storing new assemblies and irradiated assemblies under water. |
| | Sipping Test Facility | Detecting failed irradiated fuel assembly. |
| | Underwater Lights | Lighting for underwater fuel handling in BRX and BFX. |
| Loading Spent Fuel Assemblies into Casks for Delivery | Auxiliary Crane | Playing a subsidiary role in handling the spent fuel shipping cask. |
| | Spent Fuel Pool Crane | Loading spent fuel assemblies into the spent fuel shipping cask. |
| | Underwater Lights | Lighting for underwater fuel handling in BFX. |

## 10.8 Fuel Pool Cooling and Treatment System (PTR [FPCTS])

### 10.8.1 Safety Requirements

10.8.1.1 Safety Functions

a) Reactivity Control

The water inventory inside Spent Fuel Pool (SFP), together with the underwater fuel storage racks should maintain the spent fuel in a sub-critical state in the SFP under normal and accident conditions.

b) Residual Heat Removal

The PTR [FPCTS] should remove the decay heat of the fuel assemblies stored in the SFP during DBC 2-4 and DEC accident conditions.

c) Confinement of Radioactive Substance

The PTR [FPCTS] should contribute to the Confinement of Radioactive substances by ensuring containment isolation.

Furthermore, in the event of accidental draining of the pools inside the SFP, the PTR [FPCTS] should avoid uncovering of fuel in the storage racks.

10.8.1.2 Safety Functional Requirements

a) Regulations Requirement

See sub-chapter 4.8.

b) Safety Related Requirements

1) Safety Classification

Safety classification principles are presented in sub-chapter 4.7.

2) Single Failure Criterion

Single failure criterion should be applied to the equipment of the PTR [FPCTS] which ensures FC1 and FC2 classified safety functions.

3) Seismic Classification

Seismic classification principles presented in sub-chapter 4.7.6 should be applied.

4) Qualification

Qualification principles presented in sub-chapter 4.9 should be applied.

5) Emergency Power Supply

All the electrical equipment which ensure safety functions should be powered by emergency power which is safety classified.

6) Hazard Protection

The PTR [FPCTS] should be protected against internal hazards and external hazards in accordance with chapter 19 and 18 respectively.

c) Testing

The functions of system should be demonstrated by commissioning test. Safety related components should be subject to periodic tests.

### 10.8.2 Role of the System

10.8.2.1 Normal Conditions

The PTR [FPCTS] is designed for the following major functions:

a) Cooling of SFP,

b) Purification of the water in the BRX pools (including Reactor Cavity and Internals Storage Compartment), BFX pools (including SFP, Transfer Compartment and Cask Loading Pit), IRWST and In-Vessel Retention (IVR) tank,

c) Skimming of the BRX pools and BFX pools,

d) Filling and draining of the BRX pools and BFX pools except SFP according to the needs in normal operation,

e) Water make-up for SFP.

10.8.2.2 Fault Conditions

During DBC2-4 and some DEC-A accident conditions such as SBO and Total Loss of Cooling Chain (TLOCC), at least one of PTR [FPCTS] cooling trains is in operation to remove the decay heat in the pool.

When total loss of PTR [FPCTS] cooling trains occurs, there are two ways to makeup water of SFP to compensate for the loss of water boiling off. One is the ASP [SPHRS] gravitationally, and the other is external water make-up line.

### 10.8.3 Design Basis

10.8.3.1 Safety Design Basis

The PTR [FPCTS] should maintain the temperature of SFP below 50℃in normal operation conditions, 80℃in DBC2-4 conditions and 95℃in DEC-A conditions if PTR [FPCTS] cooling train is available.

The make-up flow rate when total loss of PTR [FPCTS] cooling trains occurs should cover the loss by evaporation or boiling (associated with the decay heat).

In order to prevent the SFP becoming empty, all pipe penetrations are above the top level of the fuel to prevent the pool draining completely in the event of a pipe break.

10.8.3.2 Operation Design Basis

The SFP and BRX pools purification trains are required to renew the water volume in the SFP and BRX pools to remove the impurities and ensure the chemical characteristics and visibility of the water.

### 10.8.4 System Description

10.8.4.1 General System Description

The PTR [FPCTS] consists of four parts: the SFP cooling trains, purification and water transfer unit, skimming unit and water make-up unit.

a) SFP Cooling Trains

The PTR [FPCTS] has three redundant cooling trains. Each cooling train consists of one independent suction and discharge line of SFP, one cooling pump, one exchanger and associated valves and pipes. All three cooling trains are cooled by the RRI [CCWS]. The train A and B can also be cooled by the Extra Cooling System (ECS). Downstream of

three cooling pumps there are lines connected to each other.

b) Purification and Water Transfer Unit

There are two purification pumps in parallel which are used for purification and transfer functions, they can backup each other.

There are two purification units; one is SFP purification chain which consists of an upstream filter, a demineralizer and a downstream filter, the other is BRX pools purification chain which consists of a filter. The BRX pools can also be purified by RCV purification unit.

IRWST and IVR tank can be purified by SFP purification chain if needed through Containment Heat Removal System (EHR [CHRS])/RCV [CVCS] connection and EHR [CHRS] connection.

The water transfer of BRX pools or BFX pools can also be performed by purification pumps.

c) Skimming Unit

Skimming of the SFP consists of a skimmer, a skimming pump, a filter and associated valves and pipes.

Skimming of BRX pools consists of a skimmer and a skimming pump. The skimming pump discharge is connected to the suction line of the reactor purification line.

d) Water Make-up Unit

The normal water make-up of SFP can be performed by the SED [DWDS (NI)] or the REA [RBWMS]. When total loss of PTR [FPCTS] cooling trains occurs, the make-up for SFP can be performed by the ASP [SPHRS] or external make-up line.

10.8.4.2 Main Equipment

Main components are described as follows:

a) The cooling pumps and exchangers

Each cooling train has a cooling pump and a heat exchanger to remove the decay heat of the fuel assemblies stored in the SFP. The cooling pumps are horizontal centrifugal pumps, and the exchangers are tube bundle type. The tube side of exchangers is the PTR [FPCTS], and the shell side is the RRI [CCWS] (three trains) and ECS (only for train A and B).

b) The purification pumps

The PTR [FPCTS] configures two purification pumps. The purification pumps are horizontal centrifugal pumps.

c) The skimming pumps

The PTR [FPCTS] configures one SFP skimming pump and one BRX pools skimming pump. The skimming pumps are horizontal centrifugal pumps.

d) The purification unit

The purification unit of SFP consists of an upstream filter, a demineralizer and a downstream filter. The filters are cartridge type, and the demineralizer is mixed bed type. The BRX purification filter and the SFP skimming filter are also cartridge type.

10.8.4.3 System Layout

Most of the PTR [FPCTS] is situated in the BFX apart from the filters and demineralizer which are in the BNX, the skimming of BRX pools and pipelines of purification and water transfer unit connected to BRX pools which are in the BRX.

### 10.8.5 Preliminary Design Substantiation

10.8.5.1 Compliance with Regulations

The PTR [FPCTS] is designed in compliance with Regulations described in sub-chapter 4.8.

10.8.5.2 Compliance with Safety Related Requirements

a) Safety Classification

According to the principle described in sub-chapter 4.7, and the PTR [FPCTS] functions, the functional classifications of main PTR [FPCTS] features are described in table T-10.8-1.

The equipment which ensures FC1 and FC2 classified safety functions above should also consider single failure criterion, emergency power supply and seismic requirements. The compliance with other requirements is described in table T-10.8-1.

b) Qualification

The safety related components will be qualified according to the requirements described in sub-chapter 4.9.

c) Emergency Power Supply

The three cooling trains of the SFP are supplied by three independent electrical divisions backed-up by the EDGs. Also, cooling train A and B are supplied by SBO diesel generators.

d) Hazard Protection

The PTR [FPCTS] is protected against external hazards mainly by the civil work. This system is located in the BRX, BFX, and BNX which are SSE1 structures. Moreover, the BRX and BFX can withstand a large commercial aircraft crash (see chapter 18).

For internal hazards, FC1 and FC2 classified equipment of the PTR [FPCTS] is protected by physical separation to prevent safety function be lost due to internal hazards (see chapter 19).

10.8.5.3 Compliance with Testing Requirement

The PTR [FPCTS] will be subject to commissioning tests before operation, so as to verify that its component performance meets the requirements and the safety functions of the system are achievable.

The PTR [FPCTS] is able to perform periodic tests on components for safety functions, so as to verify the availability of the safety functions.

### 10.8.6 Functional Diagram

Functional diagram of the PTR [FPCTS] is shown in F-10.8-1.

T-10.8-1 Compliance with requirements related to safety classification

| System Features | Functional Classification | Single Failure | Physical and Electrical Separation | Emergency Power Supply | Periodical Test | Seismic Classification |
|---|---|---|---|---|---|---|
| Containment isolation | FC1 | YES | YES | YES | YES | SSE1 |
| Cooling trains isolation from SFP | FC1 | YES | YES | YES | YES | SSE1 |
| Draining lines isolation from the bottom of the BRX and BFX pools (except SFP) | FC1 | YES | YES | YES | YES | SSE1 |
| SFP cooling | FC2 | YES | YES | YES | YES | SSE1 |
| Water make-up of SFP When total loss of PTR [FPCTS] cooling trains | FC3 | NO | NO | NO | YES | SSE1 |
| Other parts of PTR [FPCTS] | FC3 | NO | NO | NO | NO | SSE2(BRX and BFX)<br>NO(BNX) |

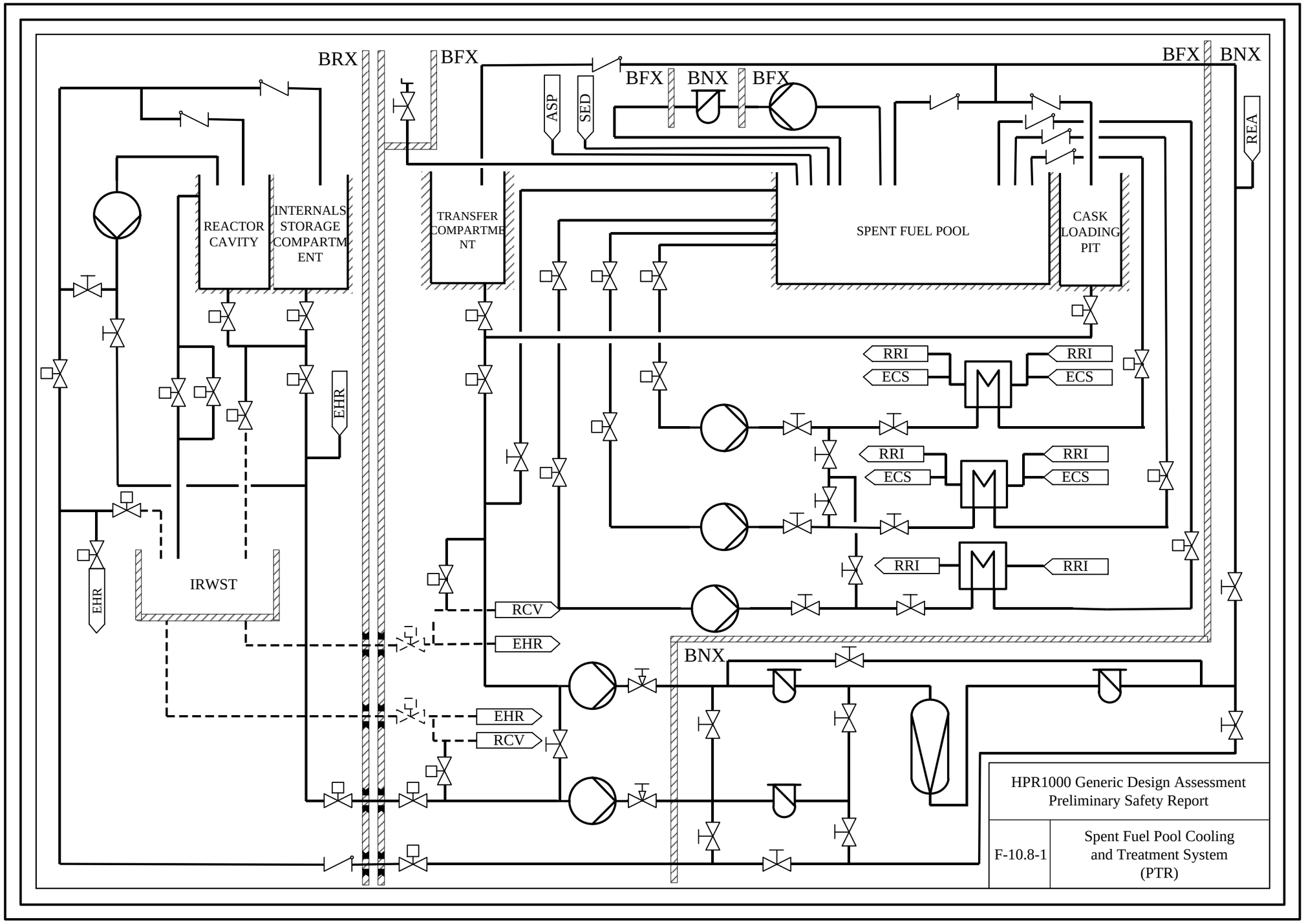
BRX
BFX
BFX
BNX
BFX
BFX
BNX
ASP
SED
REA
REACTOR CAVITY
INTERNALS STORAGE COMPARTMENT
TRANSFER COMPARTMENT
SPENT FUEL POOL
CASK LOADING PIT
EHR
RRI
ECS
RRI
ECS
RRI
ECS
RRI
RRI
EHR
IRWST
RCV
EHR
BNX
EHR
RCV
HPR1000 Generic Design Assessment
Preliminary Safety Report
F-10.8-1
Spent Fuel Pool Cooling and Treatment System (PTR)

## 10.9 Component Cooling Water System (RRI [CCWS])

### 10.9.1 Safety Requirements

10.9.1.1 Safety Functions

a) Reactivity Control

The RRI [CCWS] does not contribute to this function.

b) Residual Heat Removal

In DBC 2-4 and DEC-A conditions if available, the RRI [CCWS] provides dedicated component cooling water in three parts.

Residual Heat Removal from the primary system: the RRI [CCWS] cools the RIS [SIS] pumps and heat exchangers during incident or accident conditions (DBC-2 to DBC-4 and DEC-A).

Residual Heat Removal from the spent fuel pool: the RRI [CCWS] cools the PTR [FPCTS] heat exchangers during accident condition (DBC-4).

Heat removal from the safety classified users especially safety chillers of division C.

c) Confinement of Radioactive Substance

The RRI [CCWS] ensures the third barrier integrity by isolating the pipeline penetrating the containment.

The RRI [CCWS] contributes to ensuring the RCPB integrity by cooling the thermal barriers of reactor coolant pumps.

The system circuit should ensure the containment function if there is a leak of radioactivity through the heat exchanger.

10.9.1.2 Safety Functional Requirements

a) Regulations Requirement

See sub-chapter 4.8.

b) Safety Related Requirements

1) Safety Classification

Safety classification principles are presented in sub-chapter 4.7.

2) Single Failure Criterion

Single failure criterion should be applied to the equipment which ensures FC1 and FC2 classified safety functions.

3) Seismic Classification

Seismic classification principles presented in sub-chapter 4.7.6 should be applied.

4) Qualification

Qualification principles presented in sub-chapter 4.9 should be applied.

5) Emergency Power Supply

All the electrical equipment which ensures safety functions should be powered by emergency power supply.

6) Hazard Protection

The design of the RRI [CCWS] should meet the requirements for protection against internal hazards in accordance with chapter 18 and 19.

c) Testing

The functions of RRI [CCWS] should be demonstrated by commissioning tests. Safety related components should be subject to periodic testing.

### 10.9.2 Role of the System

10.9.2.1 Normal Conditions

The main function of RRI [CCWS] in normal conditions is providing cooling water for equipment operating in normal conditions. The main ones are：

- RRI [CCWS] pumps;
- Thermal barriers of reactor coolant pumps;
- RCV [CVCS] heat exchangers and pumps;
- REN [NSS] heat exchangers;
- PTR [FPCTS] heat exchangers;
- LHSI pumps and RHR heat exchangers (only reactor shutdown and startup conditions);
- TEP [CSTS] heat exchangers;
- TEU [LWTS] heat exchangers in the BNX;
- DEL[SCWS] cooler;
- Operational Chilled Water System (DER[OCWS]) cooler
- Containment Cooling and Ventilation System (EVR [CCVS]) coolers, etc.

10.9.2.2 Fault Conditions

In DBC 2-4, and DEC conditions if available, the RRI [CCWS] provides dedicated cooling water for following equipment:

- RRI [CCWS] pumps;
- RIS [SIS] pumps and RHR heat exchangers;
- PTR [FPCTS] heat exchangers;
- EHR [CHRS] heat exchangers (EHR [CHRS] heat exchangers operates only under accident condition);
- DEL [SCWS];
- Thermal barrier of reactor coolant pumps.

The containment isolation valves of RRI [CCWS] are closed according to the containment isolation signals.

### 10.9.3 Design Basis

10.9.3.1 Safety Design Basis

One RRI [CCWS] train is sufficient to provide cooling water for safety equipment, and maintain the RRI [CCWS] water temperature below 45℃ in DEC 2-4.

Apart from SBO and TLOCC accidents, the RRI [CCWS] is available to perform the cooling and radioactivity containment function in the DEC accident conditions.

10.9.3.2 Operation Design Basis

The three RRI [CCWS] trains should be available in normal plant operation except in the Reactor Complete Discharge (RCD) plant operating mode where maintenance is carried out on each train in turn.

The RRI [CCWS] water temperature should be maintained below 38℃ in normal operation.

Two trains should be in operation during power operation, and the third train can be in operation according to the cooling requirements of RHR Train C.

### 10.9.4 System Description

10.9.4.1 General System Description

The RRI [CCWS] consists of three safety classified and separated trains. Each train is cooled by the SEC [ESWS] via the RRI [CCWS]/SEC [ESWS] heat exchanger. Train A and train B are composed of two pumps and two heat-exchangers respectively. Train C is composed of one pump and one heat-exchanger.

Train A and B are operated in state A (full power), while train C is on standby. One pump is in service in each of train A and B, maintenance of the other pumps on standby in train A and B can be performed after isolation.

Three RRI trains are available in state A to meet the single failure criterion.

The equipment using the RRI [CCWS] is divided into dedicated users and common users.

The RRI [CCWS] common users are grouped in two separated loops called common loop 1 and common loop 2, which are cooled separately by Train A and Train B respectively.

The dedicated users are cooled by three trains independently.

10.9.4.2 Main Equipment

Main components are described as follows.

a) RRI [CCWS] Pump

The RRI [CCWS] pumps are horizontal centrifugal pumps, which convey component cooling water to the equipment that needs cooling, and return the heated water back to the RRI [CCWS] heat exchangers.

b) RRI [CCWS]/SEC [ESWS] Heat Exchanger

The RRI [CCWS]/SEC [ESWS] heat exchangers are of plate type. The material can withstand sea water. They remove heat from RRI [CCWS] water, transfer the heat to the SEC [ESWS], and provide cooled water for the RRI [CCWS] users.

c) Surge Tank

The surge tanks are stainless steel vessels, which are designed with sufficient capacity to meet the inventory needs of the various RRI [CCWS] pipe networks. The RRI [CCWS] surge tanks can be made up by the SED [DWDS (NI)] automatically when the level falls

below a threshold value.

10.9.4.3 System Layout

The main equipment of each train is situated in the BSA/BSB/BSC respectively. And the component cooling water pipelines connect the main equipment of the RRI [CCWS] with different users located in Nuclear Island (NI) buildings (BRX, BSX, BFX, and BNX).

### 10.9.5 Preliminary Design Substantiation

10.9.5.1 Compliance with Regulations

The RRI [CCWS] design is in compliance with regulations described in sub-chapter 4.8.

10.9.5.2 Compliance with Safety Related Requirements

a) Safety Classification

The compliance with requirements related to safety classification is described in table T-10.9-1.

b) Qualification

The equipment performing FC1 or FC2 functions will be qualified according to the requirements described in sub-chapter 4.9, so that they are capable of performing its functions under normal and accident conditions.

c) Hazard Protection

The RRI [CCWS] is protected against external and internal hazards mainly by the civil work and physical separation.

10.9.5.3 Compliance with Testing Requirement

The RRI [CCWS] will be subject to commissioning tests before power operation, so as to verify that its component performance meets the requirements and the safety functions of the system are achievable.

The RRI [CCWS] is designed to be capable of monitoring different components during normal operation, so as to ensure that all functions of the system can be correctly executed, and be able to perform periodic tests on components for safety functions, so as to verify the availability of the safety functions.

The main system testing items are listed here below:

a) Pump operation functional testing.

b) Heat-exchanger efficient testing.

Train A and B are operated in state A (full power) with one pump and one exchanger in service in each train. Maintenance of the other pumps and exchangers on standby in train A and B can be performed. Besides, the maintenance of other parts of RRI can be performed in the RCD state.

### 10.9.6 Functional Diagram

Functional diagrams of the RRI [CCWS] are shown in F-10.9-1, F-10.9-2 and F-10.9-3.

T-10.9-1 Compliance with requirements related to safety classification

| System Features | Functional Classification | Single Failure | Physical and Electrical Separation | Emergency Power Supply | Periodic Test | Seismic Classification |
|---|---|---|---|---|---|---|
| RRI [CCWS] main cooling loop (including pipelines and valves) | FC1 | YES<br>three redundant and separated trains | YES | YES<br>EDG | YES | SSE1 |
| Containment isolation | FC1 | YES<br>two redundant isolation valves | YES<br>inside and outside containment | YES<br>EDG and UPS | YES | SSE1 |
| Dedicated users cooling lines | FC1 | YES<br>three redundant trains | YES | YES<br>EDG | YES | SSE1 |
| Common users cooling lines | FC2/FC3 | NO | NO | NO | NO | SSE1/SSE2 |

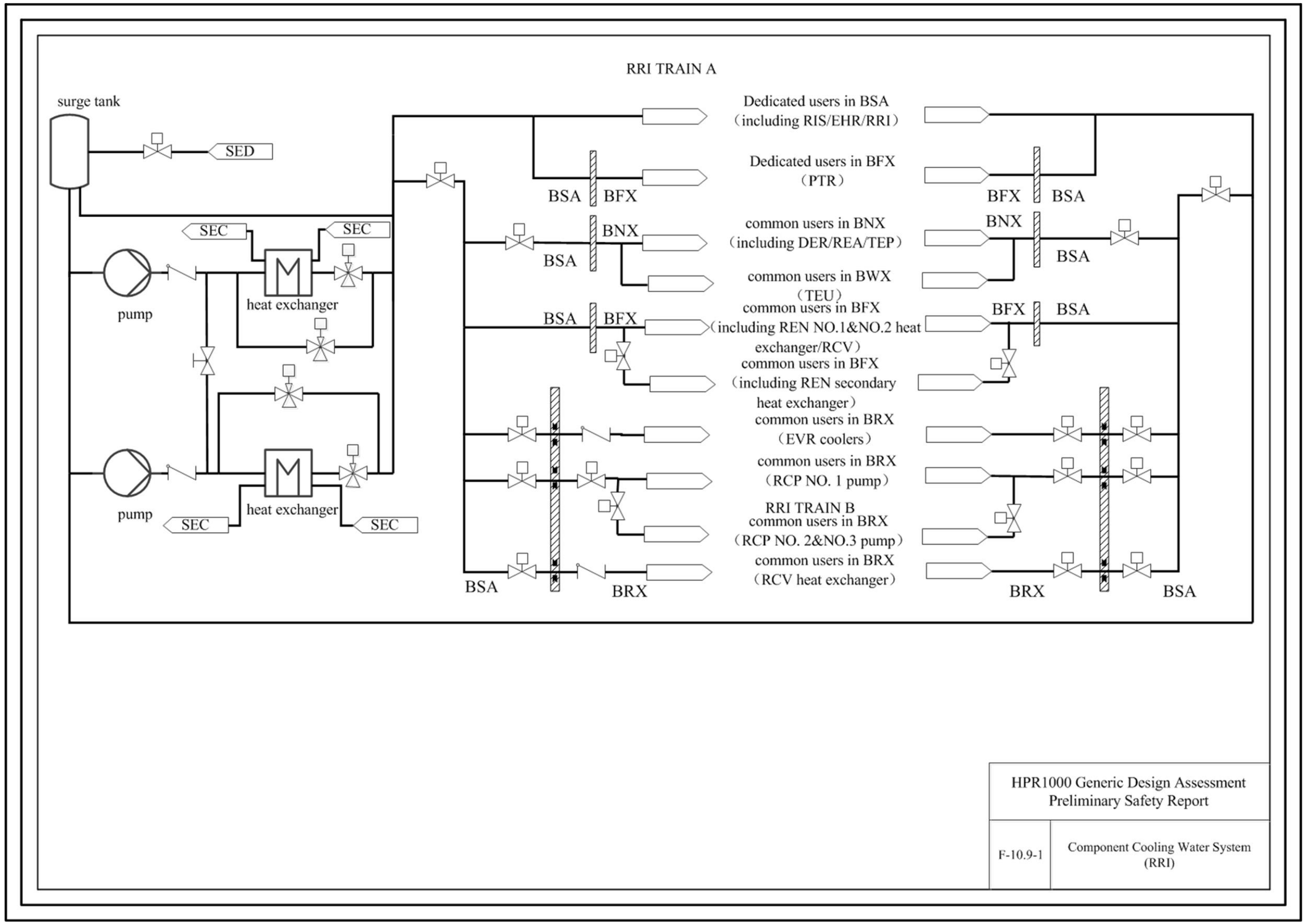
RRI TRAIN A
surge tank
SED
SEC
SEC
pump
heat exchanger
pump
SEC
heat exchanger
SEC
BSA
BFX
Dedicated users in BSA
（including RIS/EHR/RRI）
Dedicated users in BFX
（PTR）
BFX
BSA
BSA
BNX
common users in BNX
（including DER/REA/TEP）
BNX
BSA
common users in BWX
（TEU）
BSA
BFX
common users in BFX
（including REN NO.1&NO.2 heat exchanger/RCV）
BFX
BSA
common users in BFX
（including REN secondary heat exchanger）
common users in BRX
（EVR coolers）
common users in BRX
（RCP NO. 1 pump）
RRI TRAIN B
common users in BRX
（RCP NO. 2&NO.3 pump）
common users in BRX
（RCV heat exchanger）
BSA
BRX
BRX
BSA
HPR1000 Generic Design Assessment
Preliminary Safety Report
F-10.9-1
Component Cooling Water System
(RRI)

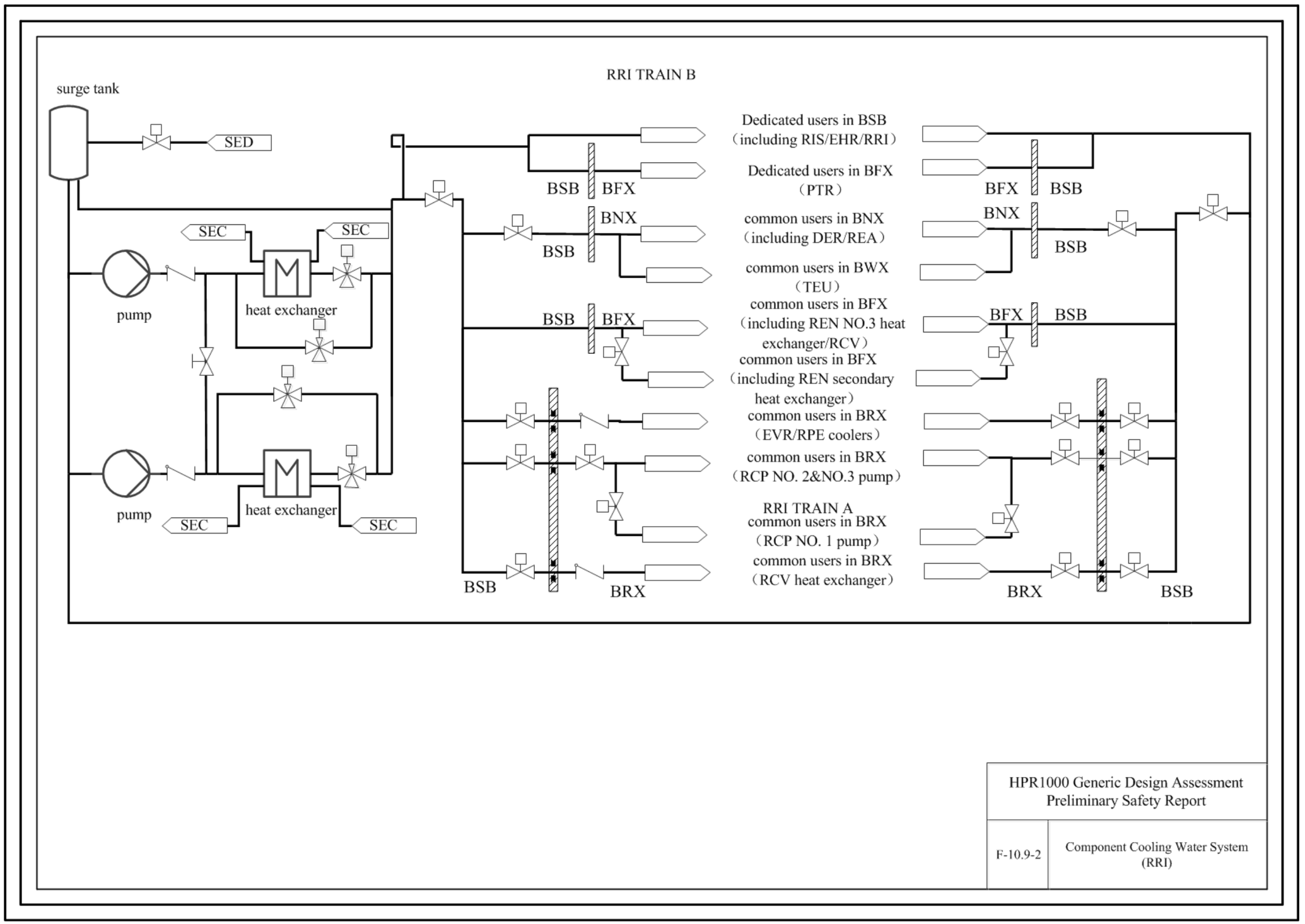
RRI TRAIN B
surge tank
SED
SEC
SEC
pump
heat exchanger
pump
heat exchanger
SEC
SEC
BSB
BFX
BNX
BSB
BSB
BFX
BSB
BRX
Dedicated users in BSB
（including RIS/EHR/RRI）
Dedicated users in BFX
（PTR）
common users in BNX
（including DER/REA）
common users in BWX
（TEU）
common users in BFX
（including REN NO.3 heat
exchanger/RCV）
common users in BFX
（including REN secondary
heat exchanger）
common users in BRX
（EVR/RPE coolers）
common users in BRX
（RCP NO. 2&NO.3 pump）
RRI TRAIN A
common users in BRX
（RCP NO. 1 pump）
common users in BRX
（RCV heat exchanger）
BFX
BSB
BNX
BSB
BFX
BSB
BRX
BSB
HPR1000 Generic Design Assessment
Preliminary Safety Report
F-10.9-2
Component Cooling Water System
(RRI)

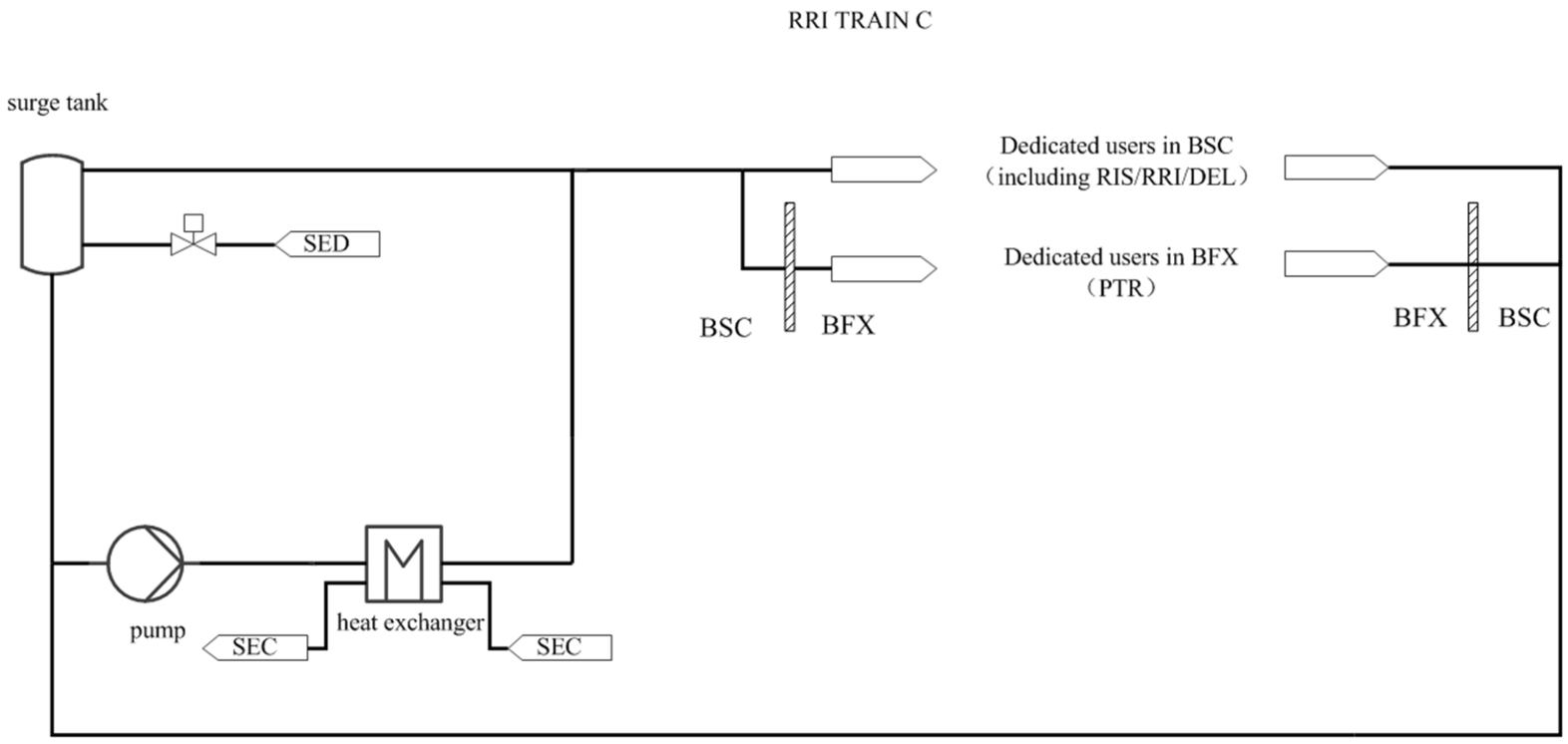


| HPR1000 Generic Design Assessment Preliminary Safety Report | |
|---|---|
| F-10.9-3 | Component Cooling Water System (RRI) |

## 10.10 Essential Service Water System (SEC [ESWS])

### 10.10.1 Safety Requirements

10.10.1.1 Safety Functions

a) Reactivity Control

The SEC [ESWS] does not contribute to this function.

b) Residual Heat Removal

In DBC 2-4 and DEC-A conditions if available, the SEC [ESWS] removes the heat collected by the RRI [CCWS] to the sea.

c) Confinement of Radioactive Substances

The SEC [ESWS] does not contribute to this function.

10.10.1.2 Safety Functional Requirements

a) Regulations Requirement

See sub-chapter 4.8.

b) Safety Related Requirements

1) Safety Classification

Safety classification principles are presented in sub-chapter 4.7.

2) Single Failure Criterion

Single failure criterion should be applied to the equipment which ensures FC1 and FC2 classified safety functions.

3) Seismic Classification

Seismic classification principles presented in sub-chapter 4.7.6 should be applied.

4) Qualification

Qualification principles presented in sub-chapter 4.9 should be applied.

5) Emergency Power Supply

All the electrical equipment which ensure safety functions should be powered by emergency power which is safety classified.

6) Hazard Protection

The design of the SEC [ESWS] should meet the requirements for protection against internal hazards and external hazards in accordance with chapter 19 and 18.

c) Testing

The functions of the SEC [ESWS] should be demonstrated by commissioning tests.

Safety related components should be subject to periodic testing.

### 10.10.2 Role of the System

10.10.2.1 Normal Conditions

In normal operation, the SEC [ESWS] cools the RRI [CCWS]/SEC [ESWS] heat exchangers using sea water from the ultimate heat sink. The operating regime of the SEC [ESWS] is similar to that of the RRI [CCWS].

10.10.2.2 Fault Conditions

In fault conditions including DBC2-4 and DEC if the SEC [ESWS] is available, the SEC [ESWS] operates together with corresponding RRI [CCWS] trains to remove the heat from the dedicated users to the ultimate heat sink.

### 10.10.3 Design Basis

10.10.3.1 Safety Design Basis

The SEC [ESWS] should ensure sufficient heat transfer from the RRI [CCWS] in normal and fault conditions.

The flow rate of SEC [ESWS] should maintain the RRI [CCWS] component water temperature and fulfill the heat removal function of the RRI [CCWS]/SEC [ESWS] heat exchanger, considering the sea water level variation and the seawater temperatures in different conditions.

### 10.10.4 System Description

10.10.4.1 General System Description

The SEC [ESWS], as an open system, sucks cooling water from the sea to cool the RRI [CCWS]/SEC [ESWS] heat exchanger of Component Cooling Water System (RRI [CCWS]) and then discharges thermal water from the RRI [CCWS]/SEC [ESWS] heat exchanger back to the sea, completing its safety function of delivering the heat load collected by RRI [CCWS] to the ultimate heat sink—— the sea.

Three trains of SEC [ESWS] are independent and physically separated.

Train A and train B are of the same configuration each having two redundant sets of equipment. Train C only has one set. Each set includes the following equipment:

a) Seawater filtering equipment,

b) Suction line,

c) Essential service water pump,

d) Shellfish catcher,

e) Discharge line.

In each SEC [ESWS] set, seawater is sucked from the sea through a dedicated SEC [ESWS] suction line. After being filtered by the rotating type screen, the seawater is pumped by the essential service water pump, through the SEC [ESWS] inlet gallery, and then into the RRI [CCWS]/SEC [ESWS] heat exchanger to cool the component cooling water. After the RRI [CCWS]/SEC [ESWS] heat exchanger, seawater is distributed to the overflow well passing through SEC [ESWS] discharge gallery and finally back to the sea through discharge structure, for example, culvert, open channel or tunnel.

10.10.4.2 Main Equipment

The main components are described as follows:

a) Seawater Filtering Equipment

The seawater filtering equipment mainly comprises coarse rack, bar screen, fine rack, trash rake and the rotating type screen. They are installed before the essential service water pump for preliminary filtering of seawater.

b) Essential Service Water Pump

The essential service water pump is a horizontal centrifugal pump which is provided with impellers made of seawater corrosion resistant stainless steel. The pump motor is of an air-cooled type supported by the ventilation system in Essential Service Water Pump Station-A (BPA) or Essential Service Water Pump Station-B (BPB)..

Each essential service water pump is capable of providing the flow rate required by RRI [CCWS]/SEC [ESWS] heat exchanger even at the minimum design seawater level.

c) Shellfish Catcher

The shellfish catcher is made of seawater corrosion resistant material. It is capable of performing an automatic backwash. The shellfish catcher is set upstream of RRI [CCWS]/SEC [ESWS] heat exchanger for filtering out marine objects.

10.10.4.3 System Layout

The seawater filtering equipment and SEC [ESWS] pumps are located in two independent essential service water pump stations. Train A and train C are located in the Essential Service Water Pump Station-A (BPA) while being physically separated. Train B is located in the Essential Service Water Pump Station-B (BPB). The shellfish catchers are located in BSA, BSB, and BSC. And the connecting pipes between pumps, RRI [CCWS] /SEC [ESWS] heat exchangers and the discharge structure are installed in independent galleries.

### 10.10.5 Preliminary Design Substantiation

10.10.5.1 Compliance with Regulations

The SEC [ESWS] design is compliant with Regulations described in sub-chapter 4.8.

10.10.5.2 Compliance with Safety Related Requirements

a) Safety Classification

According to the principle described in sub-chapter 4.7, the functional classifications of main SEC [ESWS] features are:

1) Pumps and heat exchangers: FC1,

2) Rotating type screener: FC2.

The compliance with requirements related to safety classification is described in table T-10.10-1.

b) Qualification

The equipment performing FC1 or FC2 functions should be qualified so that they are capable of performing its functions under normal and accident conditions.

c) Hazard Protection

The SEC [ESWS] is protected against external and internal hazards mainly by the civil work and physical separation.

Design of the SEC [ESWS] has considered the variation of seawater level and temperature.

10.10.5.3 Compliance with Testing Requirement

The SEC [ESWS] will be subject to commissioning tests before power operation, so as to verify that its component performance meets the requirements and the safety functions of the system are achievable.

The SEC [ESWS] is designed to be capable of monitoring different components during normal operation, so as to ensure that all functions of the system can be correctly executed, and to be able to perform periodic tests on components delivering safety functions, so as to verify the availability of the safety functions.

The periodic tests of SEC [ESWS] mainly include:

Start-up and characteristic test of essential service water pump, only for train C.

### 10.10.6 Functional Diagram

Functional diagram of the SEC [ESWS] is shown in F-10.10-1.

T-10.10-1 Compliance with requirements related to safety classification

| System Features | Functional Classification | Single Failure | Emergency Power Supply | Periodical Test | Seismic Classification |
|---|---|---|---|---|---|
| SEC [ESWS] cooling loop(SEC [ESWS] pump, shellfish catcher, valves, pipes) | FC1 | YES | YES | YES (only for the train C of the SEC) | SSE1 |
| SEC [ESWS] rotating type screen | FC2 | NO | YES | NO | SSE1 |
| SEC [ESWS] coarse rack/trash rake/bar screen | FC3 | NO | NO | NO | SSE2 |

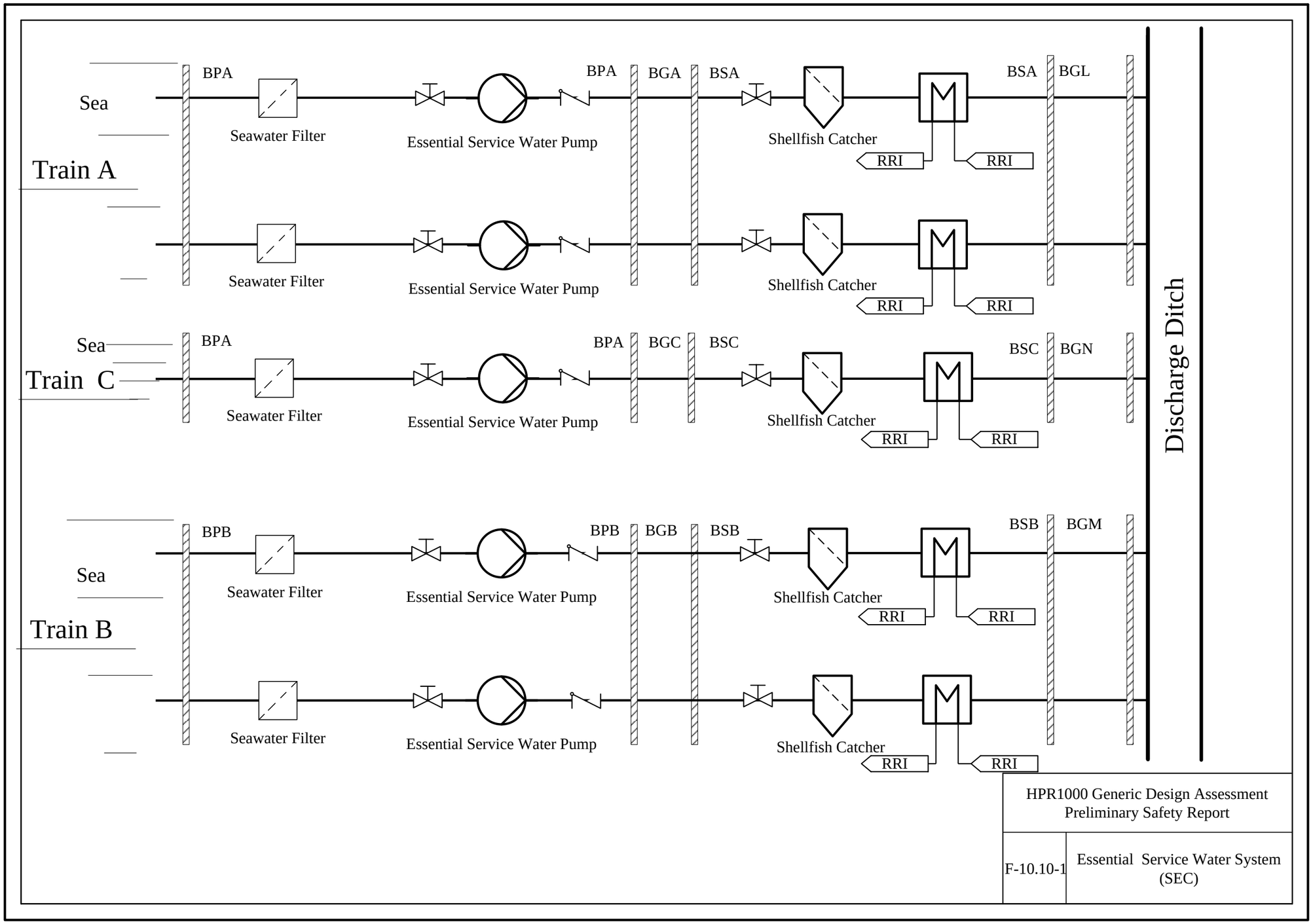
Sea
Train A
BPA
Seawater Filter
Essential Service Water Pump
BPA
BGA
BSA
Shellfish Catcher
RRI
RRI
BSA
BGL
Sea
Train C
BPA
Seawater Filter
Essential Service Water Pump
BPA
BGC
BSC
Shellfish Catcher
RRI
RRI
BSC
BGN
Discharge Ditch
Sea
Train B
BPB
Seawater Filter
Essential Service Water Pump
BPB
BGB
BSB
Shellfish Catcher
RRI
RRI
BSB
BGM
HPR1000 Generic Design Assessment
Preliminary Safety Report
F-10.10-1
Essential Service Water System (SEC)

## 10.11 Heating, Ventilation and Air Conditioning Systems

This section presents the general design requirements for the Heating, Ventilation and Air Conditioning (HVAC) systems.

### 10.11.1 Safety Requirements

10.11.1.1 Safety Functions

The ventilation systems play a key role in carrying out the third safety function - confinement of radioactive substance in order to limit the discharge of radioactive material into the environment during DBC, DEC-A or DEC-B.

The systems or parts of the system which limit radioactive discharge are as follows:

a) DWN [NABVS]: Nuclear Auxiliary Building Ventilation System;

b) DWK[FBVS]: Fuel Building Ventilation System;

c) EBA [CSBVS]: Containment Sweeping and Blown down Ventilation System;

d) EDE [AVS]: Annulus Ventilation System;

e) DWL [SBCAVS]: Safeguard Building Controlled Area Ventilation System;

f) DWW [ABCAVS]: Access Building Controlled Area Ventilation System;

g) DWQ [WTBVS]: Waste Treatment Building Ventilation System.

As a supporting system, the ventilation system and air conditioning system maintain ambient conditions (temperature, humidity and cleanliness) within the acceptable range for personnel and equipment, so as to ensure normal operation.

The systems that maintain the ambient conditions for equipment operation and habitability of the main control room are as follows:

a) DVL [EDVS]: Electrical Division of Safeguard Building Ventilation System;

b) DCL [MCRACS]: Main Control Room Air Conditioning System;

c) DVD [DBVS]: Diesel Building Ventilation System;

d) DWK [FBVS]: Fuel Building Ventilation System (only heating in the classified boric acid room and cooling in some classified process system rooms);

e) DWL [SBCAVS]: Safeguard Building Controlled Area Ventilation System (only heating in the classified boric acid room and cooling in some classified process system rooms);

f) DXS [ESWVS]: Essential Service Water Pumping Station Ventilation System;

g) EVR [CCVS]: Containment Cooling and Ventilation System (reactor pit ventilation);

10.11.1.2 Safety Functional Requirements

a) Regulations Requirement

See sub-chapter 4.8.

b) Safety Related Requirements

1) Safety Classification

Safety classification principles presents in sub-chapter 4.7.

2) Single Failure Criterion

FC1 and FC2 system should meet single failure criterion.

3) Seismic Classification

Seismic classification principles presented in sub-chapter 4.7.6 should be applied.

4) Qualification

Qualification principles presented in sub-chapter 4.9 should be applied.

5) Emergency Power Supply

F-SC1 and F-SC2 components should be powered by the main emergency diesel generators.

6) Hazard Protection

The general requirements concerning hazards to be considered are presented in chapter 19 and 18.

c) Testing

The functions of system should be demonstrated by commissioning tests. Safety related components are subject to periodic testing. The layout and design of the system must ensure easy access for in-service inspection and periodic testing of all classified equipment of HVAC systems.

### 10.11.2 Role of the System

10.11.2.1 Normal Conditions

During normal plant operation conditions, HVAC systems maintain ambient conditions (temperature, humidity and cleanliness) within the acceptable range for personnel and equipment.

10.11.2.2 Fault Conditions

a) Safety classified HVAC systems maintain ambient conditions within the acceptable range for personnel and equipment, so as to ensure correct operation of safety classified systems.

b) The HVAC systems provide an isolation and confinement function to limit the discharge of radioactive material into the environment during fault conditions.

### 10.11.3 Design Basis

10.11.3.1 Safety Design Basis

a) The system which is used to limit the radioactive discharge shall meet the following functional requirements:

1) High Efficiency Particulate Air (HEPA) Filter shall be used to filter the exhaust. If necessary, iodine absorber shall be used.

2) The exhaust air shall be discharged to the main stack.

b) The system which maintains operation safety and ambient conditions required for habitability in main control room must meet the following functional requirements:

– Ambient conditions (temperature, humidity and cleanliness) shall be maintained within the acceptable-range for personnel and equipment.

10.11.3.2 Operation Design Basis

a) General

1) During normal plant operation and during accident conditions, to maintain acceptable ambient conditions (temperature, pressure, humidity, and cleanliness) for personnel and equipment.

2) During normal plant operation condition and during accident conditions, to monitor and limit the discharge of radioactive material.

3) To protect personnel and equipment from the effects of internal hazards and external hazards (see chapter 18 and chapter 19) on buildings.

b) Design Parameters of the HVAC System

1) Outdoor Design Parameters

The design parameters of the safety classified system are based on the atmospheric conditions for the site; these should be determined as follows:

– At-least-30-year plant site statistical data shall be adopted.

– Un-guaranteed 2h dry bulb temperature and the corresponding wet bulb temperature should be used for design of classified systems

2) Indoor Design Parameters

– Meet acceptable ambient requirements for the proper operation of equipment.

– Meet normal requirements for the personnel.

c) Design Characteristics

1) Characteristics of Controlled Area

– The exhaust is greater than the air supply in controlled area, so as to maintain dynamic containment.

– The airflow flows from a room with low contamination to a room with high contamination.

– All exhaust air from the controlled area is required to be filtered and discharged through the main stack.

– If necessary, all exhaust air from “room with iodine contamination risk” can be treated by iodine absorber.

– During normal operation, 20Pa negative differential pressure is maintained between the room (or rooms) with iodine contamination risk and the adjacent low pollution rooms.

– The minimum ventilation rate in controlled area depends on the degree of radioactive hazard in the room (s):

• Room with iodine contamination risk: 4 vol/h.

• Room with aerosol or uncertain atmospheric contamination risk: 2 vol/h.

• Room without aerosol or uncertain atmospheric contamination risk: 1 vol/h.

2) Characteristics of Uncontrolled Area

– The ventilation system can operate in the recycling mode.

– The exhaust does not need special filtration and can be directly discharged into

outdoors.

3) Characteristics of Area with Explosion Risk

As for other areas containing explosive gas risk except the reactor building, the minimum ventilation rate is 12vol/h. Measures should be taken to avoid the local accumulation hazard of explosive gas. Gas in the hazardous area should not flow to areas without hazard.

The ventilation system served for the battery room must be able to limit hydrogen concentration below the minimum explosion limit. If there is hazard (e.g. failure of ventilation system) which would result in generation of explosive gas, the alarm signal should be sent to main control room.

### 10.11.4 System Description

10.11.4.1 General System Description

General air conditioning is supplied to each room to the amount required by the supply fan after the supply air has been conditioned by filter, heater/cooling coil and humidifier (if necessary).

Some of the exhaust air from the rooms without contamination risk should be used as recycled air in order to save energy.

The exhaust air from the rooms with contamination risk should be not recycled but directly discharge to the outside atmosphere.

All of the exhaust air from the rooms with airborne or radioactivity risk should be discharged to the stack after the exhaust air is treated by the filter, the HEPA filter and/or iodine absorber.

10.11.4.2 Main Equipment

a) Fan

Centrifugal fan is of a non-overload type, adopts backward-curved blade, and implements dynamic balance and static balance. The fan is of direct connection type.

Axial fan is of direct connection with motor and non-overload type, and implements dynamic balance and static balance.

b) Filter

The filter consists of the standard-size cells installed in the painted carbon steel framed bent or air-tight filter box. Each cell is of disposable type. Unless otherwise indicated, filtration layer is made of glass fiber.

c) HEPA Filter

The HEPA filters are used to filter small size dust particles.

d) Iodine Absorber

Iodine absorbers are used to absorb radioactive iodine suspended in air.

e) Cooling Coil

The ventilation systems use cooling coil in the air-conditioning loop. The coil is copper tube with fins. Droplet separators and drain tube are provided to collect and discharge condensation. Coil is cooled by chilled water system in nuclear island building.

f) Electric Heater and Heating Coil

The ventilation systems use electric heater or heating coil (heated by hot water system) for heating. In the areas with hydrogen hazard (battery room), the heater is of explosion proof type.

g) Humidifier

Humidifier is used to ensure necessary relative humidity conditions.

10.11.4.3 System Layout

All systems are arranged in the NI Buildings.

The DCL [MCRACS]/DVL [EDVS] are located in the Safeguard Buildings. The DWL [SBCAVS]/EBA [CSBVS]/EDE [AVS] are located in the Fuel Building. The DWN [NABVS] are in the Nuclear Auxiliary Building. The Containment Internal Filtration System (EVF [CIFS])/EVR [CCVS] are located in Reactor Building. The Access Building Uncontrolled Area Ventilation System (DVW [ABUAVS])/DWW [ABCAVS] are located in Access Building.

### 10.11.5 Preliminary Design Substantiation

10.11.5.1 Compliance with Regulations

The design of the HVAC systems is in compliance with regulations described in sub-chapter 4.8.

10.11.5.2 Compliance with Safety Related Requirements

According to the principle described in sub-chapter 4.7 and the system functions, the safety classifications and the compliance with requirements related to safety classification is described in table T-10.11-1.

10.11.5.3 Compliance with Hazard Protection Requirement

The HVAC systems are protected against external hazards mainly by the civil work and physical separation. These systems are located in NI Buildings.

External and internal hazards are described in chapters 18 and 19 respectively.

10.11.5.4 Compliance with Qualification Requirement

The HVAC equipment is qualified in accordance with the requirements described in sub-chapter 4.9.

10.11.5.5 Compliance with Testing Requirement

HVAC systems should be subject to commissioning tests before being put into operation, so as to verify that its component performance meets the requirements and that the safety functions of the system are achievable.

HVAC systems are designed to be capable of monitoring different components during normal operation, so as to ensure that all functions of the system can be correctly carried out, and are able to perform periodic tests on components required to deliver safety functions, so as to verify the availability of the safety functions.

### 10.11.6 Functional Diagram

Functional diagrams of HVAC systems are shown in F-10.11-1 and F-10.11-2.

**T-10.11-1 Compliance with requirements related to safety classification**

| System Codes | System Features | Safety Classification | Single Failure | Physical and Electrical Separation | Emergency Power Supply | Periodical Test | Seismic Classification |
|---|---|---|---|---|---|---|---|
| DWN [NABVS] | Nuclear Auxiliary Building Ventilation System | | | | | | |
| | Isolation valves for fresh air inlet and check valves at downstream of exhaust fans | FC3 | NO | NO | NO | YES | SSE1 |
| | Extraction HEPA filtering and iodine filtering | FC3 | NO | NO | NO | YES | NO |
| | Negative pressure control of nuclear auxiliary buildings | FC3 | NO | NO | NO | YES | NO |
| | Heating of the Bo2 boron room | FC3 | NO | NO | YES EDG | YES | NO |
| DWK [FBVS] | Fuel Building Ventilation System | | | | | | |
| | Isolation of main supplying and exhausting of Fuel building and hall | FC1 | YES two redundant isolation dampers | YES | YES EDG | YES | SSE1 |
| | Supplying in the anteroom of emergency personal airlock | FC1 | YES two redundant isolation dampers | YES | EDG | YES | SSE1 |

| System Codes | System Features | Safety Classification | Single Failure | Physical and Electrical Separation | Emergency Power Supply | Periodical Test | Seismic Classification |
|---|---|---|---|---|---|---|---|
| | Exhausting in the anteroom of emergency personal airlock | FC3 | NO | NO | YES EDG | YES | SSE1 |
| | Local cooling unit in room of RCV [CVCS] pump | FC3 | NO | NO | YES EDG | YES | SSE1 |
| | Local cooling unit in room of RBS [EBS] pump/ PTR [FPCTS] cooling pump | FC2 | YES | YES | EDG | YES | SSE1 |
| | Electric heater in the boric acid room | FC2 | YES | YES | EDG | YES | SSE1 |
| | Control dampers for maintaining the sub-pressure in the BFX | FC3 | NO | NO | NO | YES | SSE2 |
| | Exhausting part of DWN [NABVS] | FC2 | NO | NO | NO | YES | SSE1 |
| | Other parts of DWN [NABVS] | NC | NO | NO | NO | NO | SSE2 |
| EVR [CCVS] | Containment cooling ventilation system | | | | | | |
| | Reactor pit air supply subsystem | FC3 | YES two redundant fans | YES | YES EDG | YES | SSE1 |
| | Dome circulating ventilation subsystem, main circulating ventilation subsystem and Ventilation subsystem of the control rod drive mechanism (CRDM area) | NC | NO | NO | YES EDG | YES | SSE2 |
| EVF [CIFS] | Containment Internal Filtration System | | | | | | |
| | iodine filtration train | NC | NO | NO | NO | NO | SSE2 |

| System Codes | System Features | Safety Classification | Single Failure | Physical and Electrical Separation | Emergency Power Supply | Periodical Test | Seismic Classification |
|---|---|---|---|---|---|---|---|
| EBA [CSBVS] | Containment Sweeping and Blowdown Ventilation System | | | | | | |
| | Containment isolation valves | FC1 | YES two redundant isolation dampers | YES Arranged separate, one in reactor building and another outside reactor building | YES EDG | YES | SSE1 |
| | EBA [CSBVS] small flow ventilation subsystem | FC2 | YES two redundant trains | YES Arranged in different rooms | YES EDG | YES | SSE1 |
| | EBA [CSBVS] large flow ventilation subsystem | NC | NO | NO | NO | NO | SSE2 |
| EDE [AVS] | Annulus Ventilation System | | | | | | |
| | EDE [AVS] accident exhaust subsystem | FC2 | YES two redundant trains | YES Arranged in different rooms | YES EDG | YES | SSE1 |
| | EDE [AVS] normal ventilation subsystem | NC | NO | NO | NO | NO | SSE2 |
| DWL [SBCAVS] | Safeguard Building Controlled Area Ventilation System | | | | | | |

| System Codes | System Features | Safety Classification | Single Failure | Physical and Electrical Separation | Emergency Power Supply | Periodical Test | Seismic Classification |
|---|---|---|---|---|---|---|---|
| | Isolation of normal ventilation of safeguard buildings | FC1 | YES two redundant isolation dampers | YES | YES EDG | YES | SSE1 |
| | Extraction in accident condition of safeguard buildings and iodine filtering | FC2 | YES two redundant isolation dampers | YES | YES EDG | YES | SSE1 |
| | Isolation of air supply of the room adjacent to personnel air lock | FC1 | YES two redundant isolation dampers | YES | YES EDG | YES | SSE1 |
| | Isolation of EHR [CHRS] (supply) and RIS [SIS] (extraction) rooms | FC3 | NO | NO | YES EDG | YES | SSE1 |
| | Isolation of supply to RIS [SIS] rooms | FC1 | NO | NO | NO | YES | SSE1 |
| DVL [EDVS] | Electrical Division of Safeguard Building Ventilation System | | | | | | |

| System Codes | System Features | Safety Classification | Single Failure | Physical and Electrical Separation | Emergency Power Supply | Periodical Test | Seismic Classification |
|---|---|---|---|---|---|---|---|
| | Filtration, heating, cooling and Ventilation systems of the safety trains | FC1 | YES three trains | YES Three trains are arranged in three safeguard buildings | YES EDG | YES | SSE1 |
| | Ventilation of the remote shutdown station | FC3 | NO | NO | NO | YES | SSE2 |
| DCL [MCRACS] | Main Control Room Air Conditioning System | | | | | | |
| | Ventilation, air conditioning and heating trains and fresh air isolation | FC1 | YES three redundant trains | YES Arranged in three physical room | YES EDG | YES | SSE1 |
| | Isolation on iodine line | FC2 | YES two redundant isolation dampers | YES | YES EDG | YES | SSE1 |
| | Exhaust for the toilet | NC | NO | NO | NO | NO | SSE2 |
| DWW [ABCAVS] | Access Building Controlled Area Ventilation System | | | | | | |
| | Exhausting and filtering | FC3 | NO | NO | NO | YES | NO |
| | Other parts of DWW [ABCAVS] | NC | NO | NO | NO | NO | NO |
| DVD [DBVS] | Diesel Building Ventilation System | | | | | | |

| System Codes | System Features | Safety Classification | Single Failure | Physical and Electrical Separation | Emergency Power Supply | Periodical Test | Seismic Classification |
|---|---|---|---|---|---|---|---|
| | Extraction of heat from diesel buildings (emergency diesel buildings) | FC1 | YES three redundant trains | YES Arranged in three physical room | YES EDG | YES | SSE1 |
| | Air supply, cooling and extraction from electrical equipment buildings(emergency diesel buildings) | FC1 | YES three redundant trains | YES Arranged in three physical room | YES EDG | YES | SSE1 |
| | Air supply, cooling and extraction from electrical equipment buildings(SBO diesel buildings) | FC3 | NO | YES Arranged in two physical room | YES SBO | YES | SSE1 |
| DXS [ESWVS] | Essential Service Water Pumping Station Ventilation System | | | | | | |
| | Ventilation for pump building | FC1 | YES three redundant trains | YES Arranged in three physical room | YES EDG | YES | SSE1 |
| | Ventilation for gallery | NC | NO | NO | NO | NO | NO |
| DWQ [WTBVS] | Waste Treatment Building Ventilation System | | | | | | |
| | Extraction and iodine filtering of the controlled area | FC3 | NO | NO | NO | YES | NO |

| System Codes | System Features | Safety Classification | Single Failure | Physical and Electrical Separation | Emergency Power Supply | Periodical Test | Seismic Classification |
|---|---|---|---|---|---|---|---|
| | Supply air isolation and regulation of negative pressure | FC3 | NO | NO | NO | YES | SSE1 |
| | Rest of the system | NC | NO | NO | NO | NO | NO |

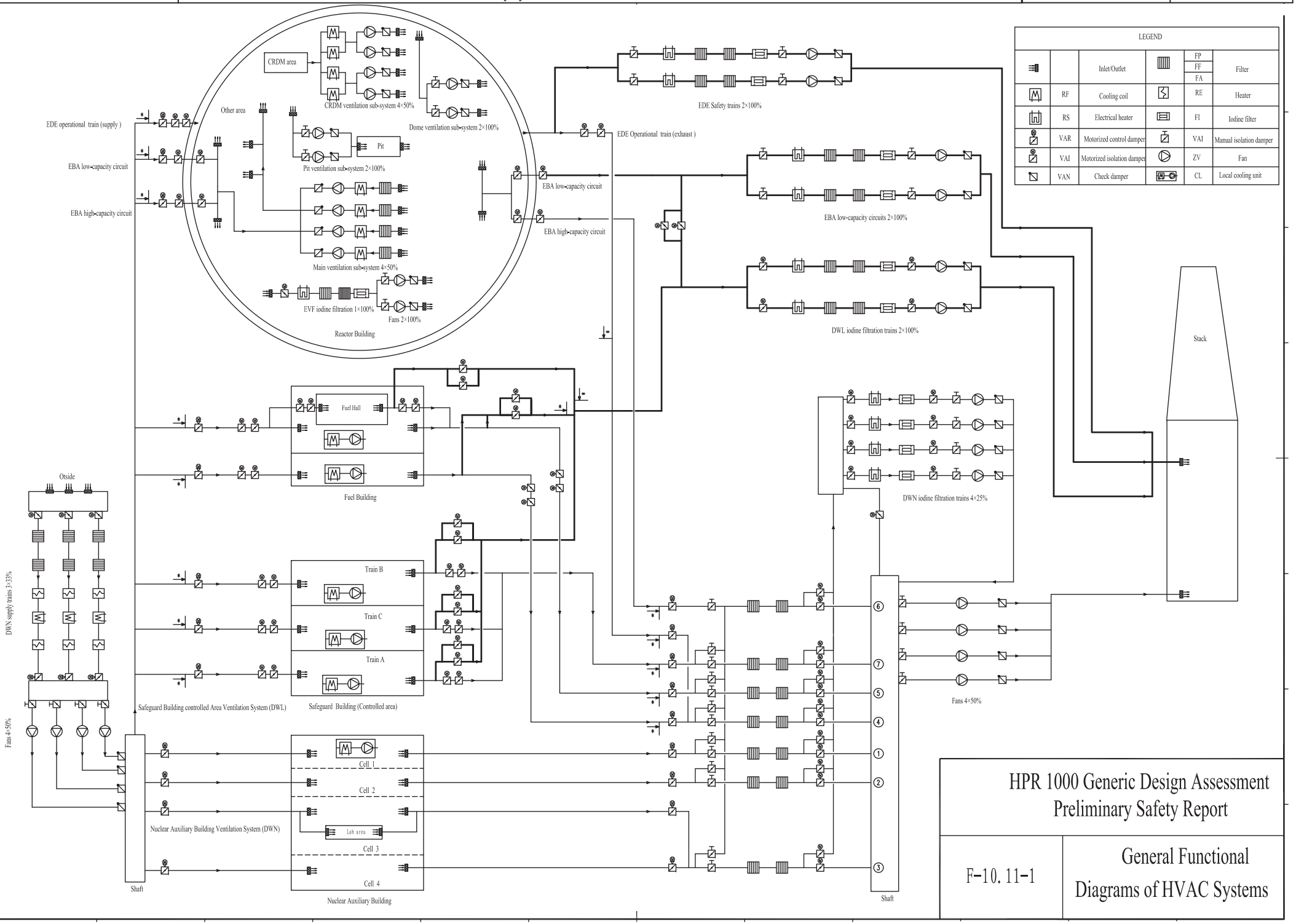
LEGEND
Inlet/Outlet
FP
FF
FA
Filter
RF
Cooling coil
RE
Heater
RS
Electrical heater
FI
Iodine filter
VAR
Motorized control damper
VAI
Manual isolation damper
VAI
Motorized isolation damper
ZV
Fan
VAN
Check damper
CL
Local cooling unit
CRDM area
CRDM ventilation sub-system 4×50%
Other area
Dome ventilation sub-system 2×100%
Pit
Pit ventilation sub-system 2×100%
Main ventilation sub-system 4×50%
EVF iodine filtration 1×100%
Fans 2×100%
Reactor Building
EDE operational train (supply )
EBA low-capacity circuit
EBA high-capacity circuit
EDE Operational train (exhaust )
EDE Safety trains 2×100%
EBA low-capacity circuits 2×100%
DWL iodine filtration trains 2×100%
Stack
Fuel Hall
Fuel Building
DWN iodine filtration trains 4×25%
Otside
DWN supply trains 3×33%
Fans 4×50%
Train B
Train C
Train A
Safeguard Building controlled Area Ventilation System (DWL)
Safeguard Building (Controlled area)
Fans 4×50%
Cell 1
Cell 2
Lab area
Cell 3
Cell 4
Nuclear Auxiliary Building Ventilation System (DWN)
Nuclear Auxiliary Building
Shaft
Shaft
HPR 1000 Generic Design Assessment
Preliminary Safety Report
F-10. 11-1
General Functional
Diagrams of HVAC Systems

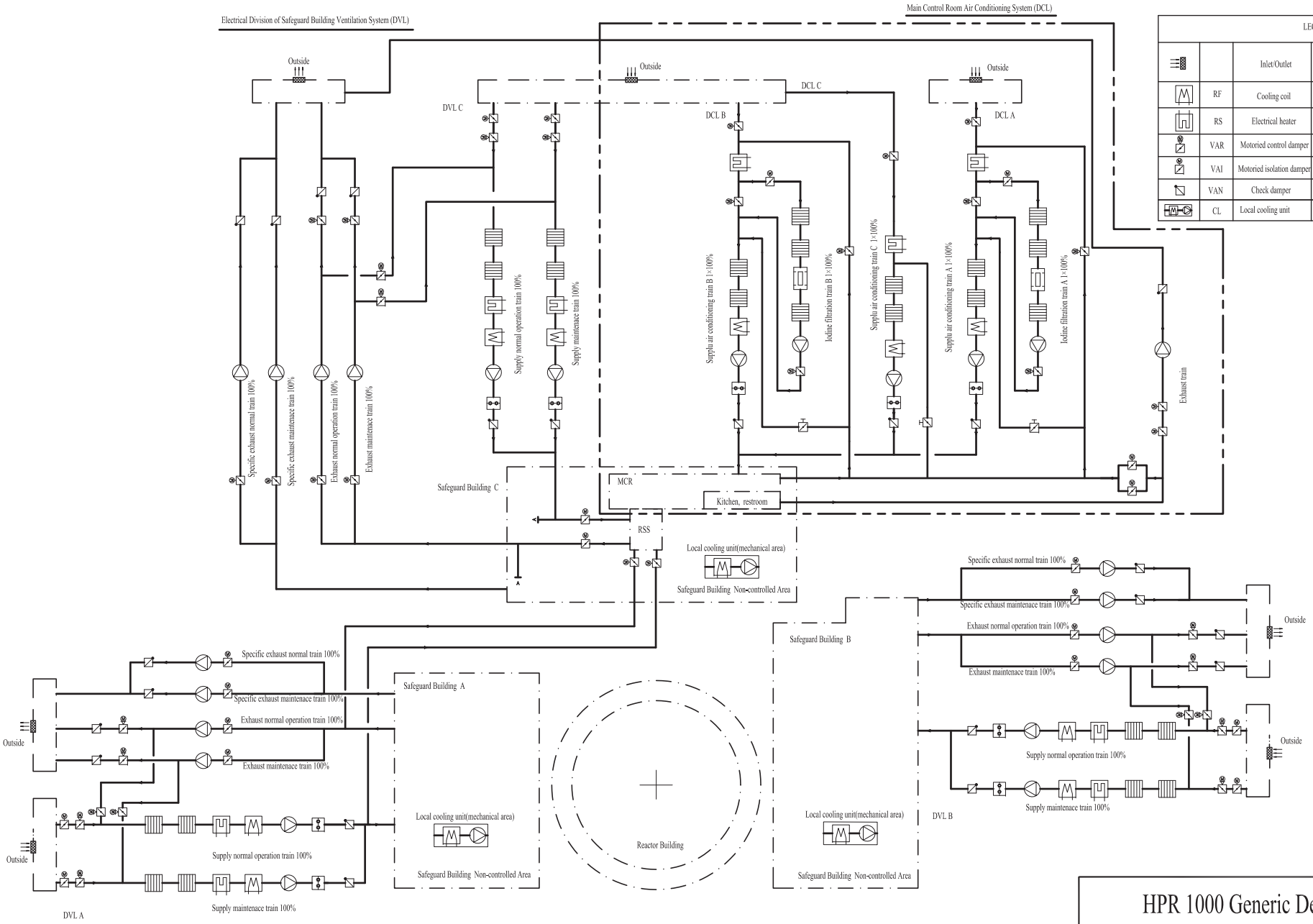


HPR 1000 Generic Design Assessment
Preliminary Safety Report

F-10.11- 2

General Functional Diagrams of HVAC Systems

## 10.12 Fire-fighting Systems

Fire-fighting systems related to nuclear island are as followings:

a) Fire-fighting Water Production System(JAC [FWPS])

b) Nuclear Island Fire Protection System(JPI [NIFPS])

c) Emergency Diesel Generator Building Fire-fighting system(JPV [DBFS])

d) Mobile and Portable Fire-fighting Equipment(JPS [MPFE])

### 10.12.1 Safety Requirements

10.12.1.1 Safety Functions

a) Reactivity Control

The JAC [FWPS]/JPI [NIFPS]/JPV [DBFS]/JPS [MPFE] does not contribute to this function.

b) Residual Heat Removal

The JAC [FWPS]/JPI [NIFPS]/JPV [DBFS]/JPS [MPFE] does not contribute to this function.

c) Confinement of Radioactive Substance

The JAC [FWPS]/JPV [DBFS]/JPS [MPFE] does not contribute to this function. Containment isolation valves of the JPI [NIFPS] contribute to ensuring the containment integrity.

10.12.1.2 Safety Functional Requirements

a) Regulations Requirement

See sub-chapter 4.8.

b) Safety Related Requirements

1) Safety Classification

Safety classification principles are presented in sub-chapter 4.7.

2) Single Failure Criterion

Single failure criterion should be applied to the equipment which ensures FC1 and FC2 classified safety functions.

3) Seismic classification

Seismic classification principles presented in sub-chapter 4.7.6 should be applied.

4) Qualification

Qualification principles presented in sub-chapter 4.9 should be applied.

5) Emergency Power Supply

All the electrical equipment which ensure safety functions should be powered by emergency power which is safety classified.

6) Hazard Protection

Fire-fighting systems should be protected against internal hazards and external hazards in accordance with chapter 18 and 19.

c) Testing

The functions of system should be demonstrated by commissioning tests. Safety related components should be subject to periodic testing.

### 10.12.2 Role of the System

10.12.2.1 Normal Conditions

The Fire-fighting Systems do not operate in normal conditions.

10.12.2.2 Fault Conditions

The Fire-fighting Systems do not operate in DBC2~DBC4 and DEC conditions.

10.12.2.3 Hazard Conditions

The JAC [FWPS] is to provide fire-fighting water for the JPI [NIFPS], the JPV [DBFS], and the other systems so as to meet the requirement of two hours water supply while the fire happens at the peak in the protected area. In case of LOOP, the JAC [FWPS] will be backed up by the emergency diesel generator.

The JPI [NIFPS] is the protection system that provides fire extinguishing measures for fires that may occur in related buildings within nuclear island. It is ready for use to provide fire-fighting water at sufficient pressure and flow rate.

The function of the JPV [DBFS] is to provide fire extinguishing measures for fires that may occur within diesel generator building. It is ready for use to provide fire-fighting water at sufficient pressure and flow rate.

After an earthquake, the JAC [FWPS], the JPI [NIFPS] and the JPV [DBFS] are still able to perform their function, to provide the fire-fighting water for FC1 and FC2 safety functions. In the event of a fire, the fire-fighting pumps can be started manually or by Digital Control System (DCS) automatically..

The JPS [MPFE] is mobile fire-fighting equipment and therefore does not consider internal and external hazards.

### 10.12.3 Principle and Objective of the Fire Protection

The principle of “defense in depth” should be implemented for the fire protection, including three levels: fire prevention, fire separation and fire control.

It provides recommendations issued from regulations regarding fire protection with respect to:

a) The financial risk (loss of assets and/or operating loss]

b) The safety of the personnel

c) The environment

### 10.12.4 System Description

10.12.4.1 General System Description

Fire protection of nuclear island is mainly composed of nuclear island Fire-fighting Water Production System (JAC [FWPS]), Nuclear Island Fire Protection System (JPI [NIFPS]), Emergency Diesel Generator Building fire-fighting System (JPV [DBFS]) and Mobile and Portable Fire-fighting Equipment (JPS [MPFE]).

Each unit sets a fire fighting water production system, whose function is to provide fire-fighting water for the other fire-fighting systems.

JAC [FWPS] mainly consists of two dedicated pools, three electric fire-fighting pumps, pipes and valves.

The JPI [NIFPS] is the fire protection system that provides fire extinguishing measures for fires that may occur in related buildings within nuclear island.

Measures used at nuclear island buildings are hydrant and fixed sprinkler system.

The function of diesel generator fire protection system is to provide fire extinguishing measures for fires that may occur within the diesel generator building. Taking into account the major fire hazards of diesel generator rooms, the system shall ensure that fire extinguishing measures can be put into use effectively to prevent the spread of fire in the event of a fire.

A fixed water spraying- foam combination system is set up in the diesel generator building, in which the open system is used to protect main fuel tank room, while a closed system is used to protect diesel generator room and the room for daily fuel tanks.

The fire hazard comes from electrical equipment in the electrical room of the diesel generator and mobile fire extinguishers are used as the fire protection means.

10.12.4.2 Main Equipment

The JAC [FWPS] mainly consists of two dedicated water tanks. The two pools are interconnected through fire-fighting pump suction pipes to ensure that fire-fighting pump can suck water from any pool and isolation valves are installed on the interconnecting pipes of the two fire-fighting water pools. Each pool can provide enough fire-fighting water for two hours while the fire happens at the peak in the protected area. The fire-fighting water tanks should be filled up within eight hours so as to make sure the unit is in normal operation.

Three electric firefighting pumps shall be arranged correspondingly for a single unit, which are powered from 1E-level power supply, and stand-by power supply of each electric firefighting pump is from different emergency power sequence. Determination of the JAC [FWPS] pump flow rate shall take the largest fire-fighting water needs of nuclear island into consideration and deployment principle of 3× 100% shall be adopted for nuclear island.

10.12.4.3 System Layout

Most of the JAC [FWPS] components are situated in the Extra Cooling System and Fire-fighting System Building (BEJ). The JPI [NIFPS] is situated in all NI buildings. The JPV [DBFS] is situated in the BDXs.

### 10.12.5 Preliminary Design Substantiation

10.12.5.1 Compliance with Regulations

The design of the fire fighting systems complies with regulations described in sub-chapter 4.8.

10.12.5.2 Compliance with Safety Related Requirements

According to the principle described in sub-chapter 4.7, and the functions of the fire-fighting systems, the safety classifications of main fire-fighting system features are:

a) JAC [FWPS]

Nuclear island fire-fighting protection: FC3,

b) JPI [NIFPS]

1) Reactor building/reactor annulus/safeguard building: FC3,

2) The essential service water pumping station and connection gallery: FC3,

3) The nuclear auxiliary building/fuel building/access building: FC3,

4) The containment vessel isolation valve: FC1,

c) JPV [DBFS]

Diesel generator building and connection gallery: FC3.

The compliance with requirements related to safety classification is described in table T-10.12-1.

10.12.5.3 Compliance with Hazard Protection Requirement

Fire-fighting systems are protected against external hazards mainly by the civil work. Moreover, the components of JAC [FWPS], JPI [NIFPS] and JPV [DBFS] are seismic designed so as to perform the fire-fighting functions.

The containment isolation valves of JPI [NIFPS] are protected against internal hazards by physical separation from the hazard.

The JAC [FWPS], JPI [NIFPS] and JPV [DBFS] need to be protected against internal fire. Main measures include:

- The redundant JAC [FWPS] pumps are physically separated from each other;
- The redundant containment penetrated lines of JPI [NIFPS] are physically separated from each other.

10.12.5.4 Compliance with Qualification Requirement

The containment isolation valves of the JPI [NIFPS] will be qualified in accordance with the requirements described in sub-chapter 4.9.

10.12.5.5 Compliance with Testing Requirement

The fire-fighting systems will be subject to commissioning tests before plant operation, in order to verify that their performance meets the operating requirements.

As the systems are not used normally, they will be subject to the following periodic tests to ensure their operating performance:

- Periodic test of JAC [FWPS] pumps;
- Check the pressure and flow rate of the JPV [DBFS] main pipe by the periodic test equipment;
- Check the pressure and flow rate of the JPI [NIFPS] by the mobile periodic test equipment.

### 10.12.6 Functional Diagram

Functional diagram of the fire-fighting system is shown in F-10.12-1.

T-10.12-1 Compliance with requirements related to safety classification

| System Features | Functional Classification | Single Failure | Emergency Power Supply | Periodical Test | Seismic Classification |
|---|---|---|---|---|---|
| JAC [FWPS](NI) | FC3 | YES | YES | YES (only for the JAC [FWPS] pump) | SSE1 (partly applicable) |
| JPI [NIFPS] | FC3 | YES | YES | YES | SSE1 (partly applicable) |
| JPI [NIFPS](only for containment isolation valves) | FC1 | YES | YES | YES | SSE1 (only for NI) |
| JPV [DBFS] | FC3 | NO | NA | YES | SSE1 |
| JPS [MPFE] | NC | NA | NA | NA | NO |

Note: All the active equipment shall consider random failure.

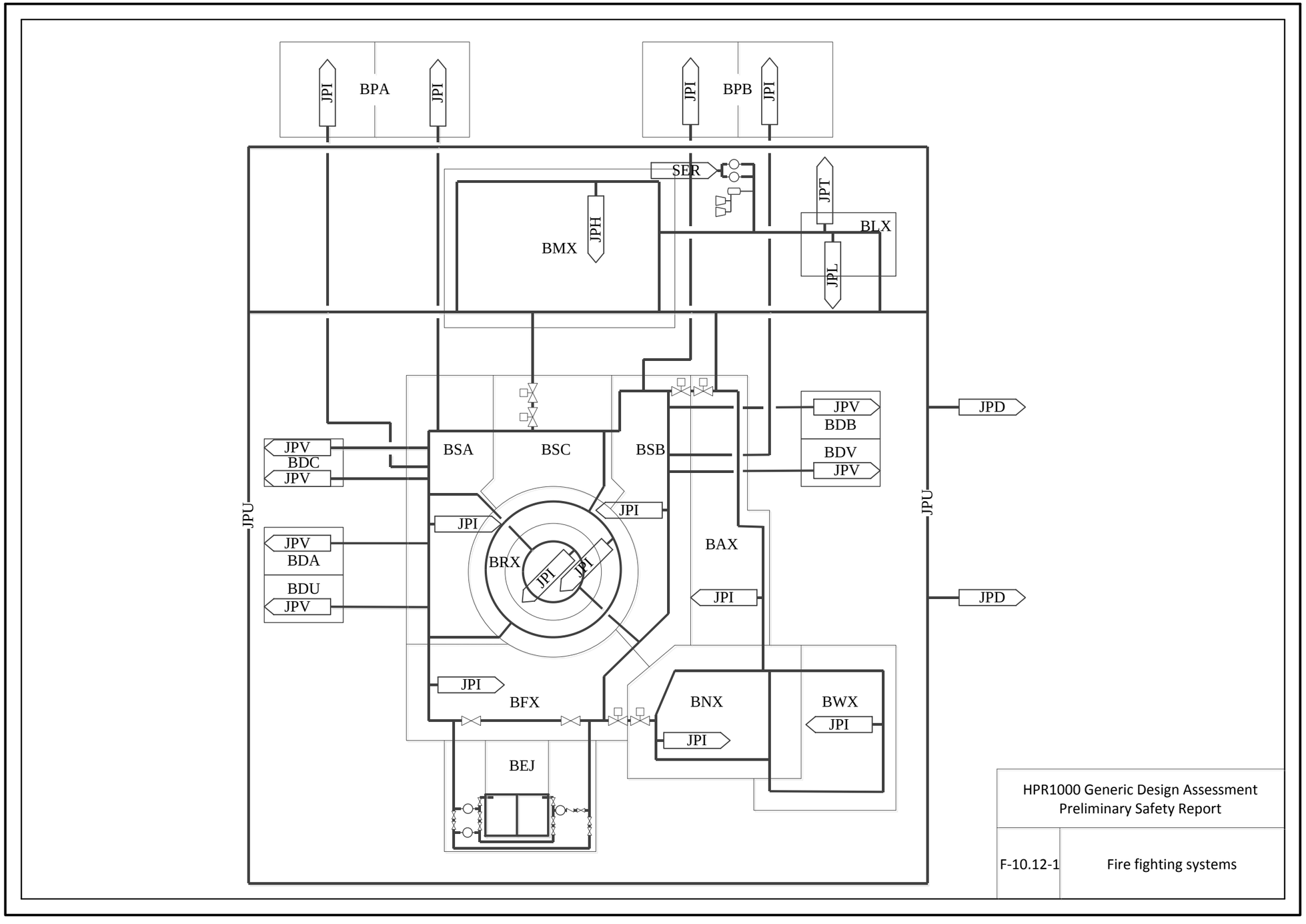
BPA
JPI
JPI
BPB
JPI
JPI
SER
JPT
BLX
BMX
JPH
JPL
JPV
BDB
BDV
JPV
JPD
JPV
BDC
JPV
BSA
BSC
BSB
JPU
JPU
JPI
JPI
JPI
JPV
BDA
BRX
JPI
JPI
BAX
BDU
JPV
JPI
JPD
JPI
BFX
BNX
BWX
JPI
JPI
BEJ
HPR1000 Generic Design Assessment
Preliminary Safety Report
F-10.12-1
Fire fighting systems

## 10.13 Heavy Load Lifting System

The heavy load lifting system in the nuclear island mainly consists of the handling system in the reactor building and the handling system in the fuel building. The main equipment includes the polar crane in reactor building and the crane for spent fuel containers in fuel building.

### 10.13.1 Design Requirements

The polar crane and the crane for spent fuel shipping containers are designed according to Design Rules for Cranes (GB/T 3811-2008), and the following requirements are met:

a) The equipment arrangement and operation ensure that the equipment does not approach or stay in the area above the safety-related equipment as far as possible; during the lifting in safety-related areas, the safe operating path be specified;

b) The equipment design minimizes the risks of dropped load. The equipment will not fail (active safety) in the case of loss of power supply. The failure of any key part or component, and the loss of power supply will immediately stop the equipment;

c) Although the single failure criterion does not apply to the polar crane, certain components are designed with redundancy in order to prevent dropped load in the event of the failure of any one component.

d) The polar crane must be designed to avoid the dropping of parts from the crane.

### 10.13.2 Polar Crane

10.13.2.1 Description

The polar crane is used to install the main equipment (reactor vessel, steam generators, pressurizer, etc.) inside the reactor building in the construction stage, and to lift the vessel head, other equipment and tools in the refueling stage. It does not directly fulfil any safety functions.

The polar crane runs on the circular rails consisting of ring beams and circular tracks.

The polar crane has three (3) trolleys:

a) One (1) primary trolley with a lifting capacity of 200 tons,

b) One (1) secondary trolley with a lifting capacity of 35 tons,

c) One (1) auxiliary trolley with a lifting capacity of 5 tons.

10.13.2.2 Classification

According to the principles described in sub-chapter 4.7, the functional classification of polar crane is NC. In order to avoid the failure of the crane, some special requirements are stipulated in the equipment technical specification. The seismic classification of polar crane is SSE2.

10.13.2.3 Safety Evaluation

The redundant design of polar crane brake and wire rope, as well as the anti-falling mechanism, can meet the requirement of holding the load in the case of failure of critical parts and components.

The polar crane can maintain its structural integrity under all accident conditions, including design basis earthquake, vibration due to airplane crash and loss of coolant accident.

The polar crane can prevent any improper movement due to the loss of power supply.

In the termination of relevant polar crane movement, the brake can rapidly function. The brake can ensure that there is no impact. The crane control device can ensure the normal movement of load during the descent.

When the voltage is under the rated voltage, the brake can still function properly. When it is detected that the lifting chain has a failure, the brake can immediately function.

Each trolley is equipped with load measuring system. For example, the auxiliary trolley measuring system can record every measured value and make a comparison. When a failure is detected, the movement can be stopped immediately.

The lifting and travelling mechanisms are equipped with speed restriction device and limiting stopper.

10.13.2.4 Material, Inspection and Test requirements

The components of the polar crane which require testing and inspection must be easy to access. In the event that the integrated test is seriously limited or may involve the risk of damage of the crane, separate tests can be carried out instead.

10.13.2.4.1 Material

Structural steelwork must comply with the requirements in GB 3811.

10.13.2.4.2 Commissioning Tests

Before the commissioning, the integrated acceptance tests must be performed on the polar crane:

a) Unloaded and fully loaded operation tests,

b) Static load and dynamic load tests.

10.13.2.4.3 Operation Inspections

During the unit operation, the periodic tests and other periodic inspections must be performed to ensure the safety of components of polar crane.

10.13.2.4.4 Periodic Tests

The polar crane must undergo periodic tests to ensure its ability to fulfill its function and to check the state of all safety related components.

### 10.13.3 Crane for Spent Fuel Containers

10.13.3.1 Description

The crane for spent fuel containers is installed in the fuel building and is designed to lift the spent fuel shipping containers among the equipment lifting port, the container preparation well and the container loading well. The maximum capacity of this crane is 130 tons.

The design characteristics of the crane for spent fuel containers are the same as those of polar crane in reactor building. The crane for spent fuel containers mainly consists of the following components:

a) Crane span structure and its traveling mechanism;

b) Trolley and trolley traveling mechanism;

c) Lifting mechanism;

d) Vertical lifting appliances for spent fuel shipping containers;

e) Rails;

f) Electrical control equipment.

The lifting mechanism of crane for spent fuel containers must be designed according to the single failure protection criterion, i.e. it must be provided with redundant protection of two winding drums, two wire ropes and three brakes. The design of winding system and the selection of wire ropes must ensure that the loads are uniformly distributed between two wire ropes. If one wire rope fractures, the other wire one can still hold the loads.

10.13.3.2 Classification

According to the principles described in sub-chapter 4.7, the functional classification of the crane for spent fuel containers is NC. In order to avoid the failure of the crane, some special requirements are stipulated in the equipment technical specification. The seismic classification of crane for spent fuel containers is SSE2.

10.13.3.3 Safety Evaluation

The lifting mechanism of crane for spent fuel containers shall be designed according to the single failure protection criterion, i.e. it must be provided with redundant protection of two winding drums, two wire ropes and three brakes. The design of winding system and the selection of wire ropes shall ensure that the loads are uniformly distributed between two wire ropes. If one wire rope fractures, the other one can still hold the loads.

10.13.3.4 Material, Inspection and Test requirements

The crane parts and components requiring test and inspection shall be easy to access.

When an integrated test may be seriously limited or may involve risk of damage, separate tests shall be performed instead.

10.13.3.4.1 Material

Structural steelwork must comply with the requirements in GB 3811.

10.13.3.4.2 Commissioning Tests

Before the commissioning, the integrated acceptance tests must be performed on the crane for spent fuel containers:

a) Unloaded and fully loaded operation Tests

b) Static load and dynamic load tests.

10.13.3.4.3 Operation Inspections

During the unit operation, the periodic tests and other periodic inspections must be performed to ensure the safety of components of the crane for spent fuel containers.

10.13.3.4.4 Periodic Tests

The crane for spent fuel containers must undergo periodic tests to ensure its ability to fulfil its function and to check the state of all safety related components.

## 10.14 Safety Chilled Water System

### 10.14.1 Safety Requirements

10.14.1.1 Safety Functions

The DEL [SCWS] operates permanently during plant normal conditions and during accident conditions. DEL [SCWS] provides chilled water for the following safety-classified systems as a heat sink: DVL [EDVS], DWL [SBCAVS], DCL [MCRACS] and DWK [FBVS].

In case of loss of normal cooling chain, DEL [SCWS] provides motor cooling water and gland seal water for the LHSI (low-head safety injection system) pumps in Trains A and B.

10.14.1.2 Safety Functional Requirements

a) Regulations Requirement

See sub-chapter 4.8.

b) Safety Related Requirements

1) Safety Classification

Safety classification principles are presented in sub-chapter 4.7.

2) Single Failure Criterion

The DEL [SCWS] performs FC1 safety functions. The design of DEL [SCWS] should meet the single failure criterion.

3) Seismic Classification

Seismic classification principles presented in sub-chapter 4.7.6 should be applied.

4) Qualification

Qualification principles presented in sub-chapter 4.9 should be applied.

5) Emergency Power Supply

All the electrical equipment which ensure safety functions should be powered by emergency power which is safety classified.

6) Hazard Protection

The DEL [SCWS] should be protected against internal hazards and external hazards in accordance with chapter 19and chapter 18.

c) Testing

The functions of system should be demonstrated by commissioning tests. Safety related components are subject to periodic testing. The layout and design of the system must ensure easy access for in-service inspection and periodic testing of all equipment.

### 10.14.2 Role of the System

10.14.2.1 Normal Conditions

The DEL [SCWS] operates during plant normal conditions to provide chilled water for the safety-classified systems as a heat sink.

10.14.2.2 Fault Conditions

The DEL [SCWS] is required to operate during DBC2~4 conditions and DEC events.

The DEL [SCWS] is designed for the following major functions:

To provide chilled water for the following systems as a heat sink: DVL [EDVS], DWL [SBCAVS], DCL [MCRACS] and DWK [FBVS] (classified parts) and cool RIS [SIS] pumps in the event of failure of the RRI [CCWS] heat sink.

### 10.14.3 Design Basis

10.14.3.1 Safety Design Basis

The DEL [SCWS] should comply with requirements related to safety classification.

10.14.3.2 Operation Design Basis

The supply water temperature of cooling water unit is 7℃, and the return water temperature is 12℃.

### 10.14.4 System Description

10.14.4.1 General System Description

DEL [SCWS] includes 3 trains of mutually independent and physically separated pipelines (one train is provided for each independent safeguard building). Each train of pipeline provides a heat sink for the cooling coil of DVL [EDVS], DWL [SBCAVS] and DWN [NABVS] (classified parts) in the corresponding buildings. Train A/B can serve as a backup of RRI [CCWS] to cool RIS [SIS] pump, and Train A/B/C can cool the cooling coil of DCL [MCRACS].

Each train with 100% is provided with: one refrigerating unit, one circulating water pump and one nitrogen-filled expansion tank. One train of bypass pipe is provided for refrigerating unit to ensure that the chilled water flow through the refrigerating unit keeps constant when user flow changes.

The refrigerating unit of Train A/B is cooled by outdoor air. The refrigerating unit of Train C is cooled by RRI [CCWS] cooling water to reduce the impact due to unavailability of heat sink from cooling water.

10.14.4.2 Main Equipment

The main equipment of the DEL [SCWS] includes refrigerating units, pumps, expansion tanks, filters, and pipe fittings.

10.14.4.3 System Layout

The DEL [SCWS] is arranged in the safeguard buildings.

### 10.14.5 Preliminary Design Substantiation

10.14.5.1 Compliance with Regulations

The DEL [SCWS] design is compliant with regulations described in sub-chapter 4.8.

10.14.5.2 Compliance with Safety Related Requirements

According to the principle described in sub-chapter 4.7, the compliance with requirements related to safety classification is described in table T-10.14-1.

10.14.5.3 Compliance with Hazard Protection Requirement

The DEL [SCWS] is protected against external hazards mainly by the civil work. This system is located in safeguard building.

For internal hazards, FC1 classified equipment of DEL [SCWS] is protected by physical separation.

10.14.5.4 Qualification

The DEL [SCWS] equipment is qualified in accordance with the requirements described in sub-chapter 4.9.

10.14.5.5 Compliance with Testing Requirement

The DEL [SCWS] should be subject to commissioning tests before being put into operation to verify that its component performance meets the requirements and the safety functions of the system are achievable.

The DEL [SCWS] is designed to be capable of monitoring different components during normal operation to ensure that all functions of the system can be correctly executed, and be able to perform periodic tests on components for safety functions to verify the availability of the safety functions.

### 10.14.6 Functional Diagram

Functional diagram of DEL [SCWS] is shown in F-10.14-1.

**T-14-1 Compliance with requirements related to safety classification**

| System features | safety class | Single failure | physical and electrical separation | Emergency power supply | periodical test | seismic classification |
|---|---|---|---|---|---|---|
| Safety Chilled Water System | FC1 | YES<br>three redundant trains | YES<br>Arranged in three physical room | YES<br>EDG | YES | SSE1 |

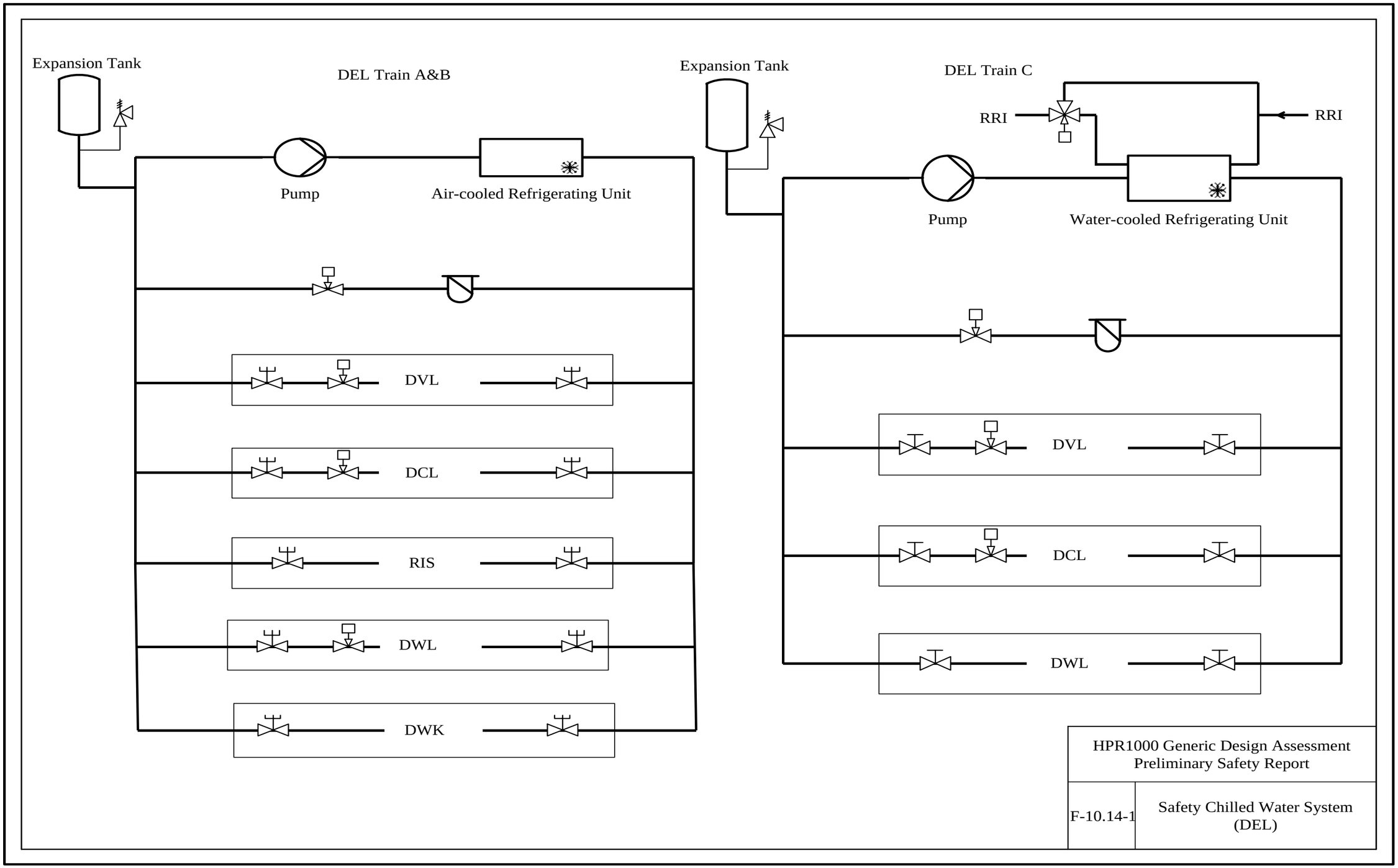
Expansion Tank
DEL Train A&B
Pump
Air-cooled Refrigerating Unit
DVL
DCL
RIS
DWL
DWK
Expansion Tank
DEL Train C
RRI
RRI
Pump
Water-cooled Refrigerating Unit
DVL
DCL
DWL
HPR1000 Generic Design Assessment
Preliminary Safety Report
F-10.14-1
Safety Chilled Water System (DEL)

## 10.15 References

[1] NNSA, Design of fuel loading and storage system for nuclear power plant, HAD 102/15, 2007.

[2] NNSA, Safety regulations for Design of Nuclear Power Plants, HAF 102, 2004.

[3] NNSA, General safety principles on nuclear power plant design, HAD 102/01, 1989.

[4] NNSA, Seismic Design and Qualification for Nuclear Power Plants, HAD 102/02, 1996.

[5] NNSA, Design of Reactor Coolant and Associated Systems in NPPs, HAD 102/08, 1989.

[6] NNSA, Ultimate Heat Sink (UHS) System of a Nuclear Power Plant and Its Directly Associated Heat Transport Systems, HAD 102/09, 1987.

[7] NB/T 20234-2013, Design rules for cranes at Nuclear Power Plants.

[8] RCC-M, Design and Building Rules for Mechanical Equipment for Pressurized Water Reactor Nuclear Islands, Version 2007.

[9] RCC-E, Design and Building Rules for Electric Equipment for Pressurized Water Reactor Nuclear Islands, Version 2005.

[10] GB/T 3811-2008, Design Rules for Cranes, Version 2008.