Revision	Approved by	Number of Pages
000		142
Approval Date	12/11 2018	

General Nuclear System Ltd.

UK HPR1000 GDA Project

Document Reference:	HPR/GDA/PCER/0003

Title:

Pre-Construction Environmental Report

Chapter 3

Demonstration of BAT

DISTRIBUTION LIST

Recipients	Cross Box
GNS Executive	☐
GNS all staff	☐
GNS and BRB all staff	☒
CGN	☒
EDF	☒
Regulators	☒
Public	☒

MODIFICATION RECORD

Revision	Section	Page	Modification
000	ALL	ALL	First Issue

TABLE OF CONTENTS

3.1 List of Abbreviations and Acronyms 4

3.2 Introduction 7

3.3 Approach to Environmental Optimisation and Application of Best Available Techniques 9

3.3.1 Regulatory Context 9

3.3.2 BAT Principles 14

3.3.3 BAT Methodology 16

3.4 Claims, Arguments and Evidence 18

3.4.1 Claim 1: Prevent and Minimise the Creation of Radioactive Waste 20

3.4.1.1 Argument 1a: Minimise the Concentration of Fission Products in the Primary Coolant by the Design, Manufacture and Management of Fuel 22

3.4.1.2 Argument 1b: Minimise the Quantity of Spent Fuel by Core Dimension Design and Cycle length Selection 31

3.4.1.3 Argument 1c: Minimise the Generation of Tritium in the Primary Coolant 32

3.4.1.4 Argument 1d: Minimise the Radioactivity of Waste by Optimising the Water Chemistry in the Primary Coolant 35

3.4.1.5 Argument 1e: Minimise Activated Corrosion Products through Material Selection 38

3.4.1.6 Argument 1f: Minimise Carbon-14 Production 43

3.4.2 Claim 2: Minimise the Radioactivity of Gaseous and Aqueous Radioactive Wastes Discharged into the Environment 45

3.4.2.1 Argument 2a: Minimise Leaks of Radioactive Process Fluids from Containment Systems 48

3.4.2.2 Argument 2b: Minimise the Transfer of Radioactivity into the Secondary

Circuit 60

3.4.2.3 Argument 2c: Minimise the Radioactivity of Gaseous Radioactive Waste Discharges by Optimising the HVAC System 66

3.4.2.4 Argument 2d: Minimise the Radioactivity of Gaseous Radioactive Waste Discharges by Optimising Gaseous Waste Treatment System 70

3.4.2.5 Argument 2e: Minimise the Radioactivity of Aqueous Discharges by Optimising the Liquid Radioactive Waste Management System 79

3.4.2.6 Argument 2f: Minimise Discharge of Tritium 86

3.4.2.7 Argument 2g: Minimise Discharge of Carbon-14 91

3.4.3 Claim 3: Minimise the Impact of Discharges on People and Non-Human Biotas.. 93

3.4.3.1 Argument 3a: Partitioning of Radionuclides has been Optimised to Minimise the Impact on Members of the Public and the Environment 95

3.4.3.2 Argument 3b: Eliminate Solids, Gases and Non-aqueous Liquids Entrained within Aqueous Radioactive Waste 95

3.4.3.3 Argument 3c: Optimisation of the Discharge Stack Height..... 96

3.4.3.4 Argument 3d: Optimisation of the Location and Timing of Liquid Radioactive Discharges 98

3.4.4 Claim 4: Minimise the Mass/Volume of Solid and Non-Aqueous Liquid Radioactive Wastes and Spent Fuel 99

3.4.4.1 Argument 4a: Minimise the Volume of Structures, Systems and Components that will become Radioactive Waste..... 101

3.4.4.2 Argument 4b: Minimise the Volume of Solid Radioactive Waste by Extending the Design Life of SSCs and Reusing Maintenance Equipment and Tools 106

3.4.4.3 Argument 4c: Reducing the Volume of Solid and Non-Aqueous Liquid Radioactive Waste Requiring Disposal by Adopting Efficient Segregation and Volume Reduction Techniques 111

3.4.5 Claim 5: Select the Optimal Disposal Routes for Wastes 116

3.4.5.1 Argument 5a: The Provision of Waste Management Facilities with Sufficient Space and Services to Allow a Future Operator to Install a Range of Waste Management Processes.....117

3.4.5.2 Argument 5b: All Solid and Non-Aqueous Liquid Lower Activity Wastes have been Demonstrated to be Compatible with Waste Treatment and Disposal Services Available in the UK by Obtaining 'Agreements-In-Principle' from Service Providers..... 121

3.4.5.3 Argument 5c: 'Disposability Assessments' have been Undertaken to Demonstrate that all Solid HAW are Compatible with Disposability Concepts Prepared by Radioactive Waste Management Ltd for the UK's Proposed GDF . 122

3.5 Conclusions.....123

3.6 References.....125

Appendix 3A The Appended Figures 130

3.1 List of Abbreviations and Acronyms

ABP	Low Pressure Feedwater Heater System [LPFHS]
ADG	Feedwater Deaerator Tank and Gas Stripper System [FDTGSS]
AHP	High Pressure Feedwater Heater System [HPFHS]
ALARA	As Low As Reasonably Achievable
ALARP	As Low As Reasonably Practicable
APA	Motor Driven Feedwater Pump System [MFPS]
APG	Steam Generator Blowdown System [SGBS]
ARE	Main Feedwater Flow Control System [MFFCS]
ATE	Condensate Polishing System [CPS]
BAT	Best Available Technique
BFX	Fuel Building
BNX	Nuclear Auxiliary Building
BPX	Personnel Access Building
BQS	Waste Auxiliary Building
BQT	Temporary Storage Facility
BRX	Reactor Buildings
BSX	Safeguard Buildings
BWX	Radioactive Waste Treatment Building
CGN	China General Nuclear Power Corporation
CRDM	Control Rod Drive Mechanism
CPR1000	Chinese Pressurised Reactor
CVI	Condensate Vacuum System [CVS]
DPUR	Dose Per Unit Release
DWK	Fuel Building Ventilation System [FBVS]
DWL	Safeguard Building Controlled Area Ventilation System [SBCAVS]
DWN	Nuclear Auxiliary Building Ventilation System [NABVS]

DWQ	Waste Treatment Building Ventilation System [WTBVS]
DWW	Access Building Controlled Area Ventilation System [ABCAVS]
EA	Environment Agency (UK)
EBA	Containment Sweeping and Blowndown Ventilation System [CSBVS]
EDE	Annulus Ventilation System [AVS]
EHR	Containment Heat Removal System [CHRS]
EPR	European Pressurised Water Reactor
GDA	Generic Design Assessment
GDF	Geological Disposal Facility
GTRF	Grid To Rod Fretting
HAW	Higher Activity Waste
HEPA	High Efficiency Particulate Air
HPR1000 (FCG3)	Hua-long Pressurised Reactor under construction at Fangchenggang nuclear power plant unit 3
HVAC	Heating, Ventilation and Air Conditioning
IAEA	International Atomic Energy Agency
ICRP	International Commission on Radiological Protection
ILW	Intermediate Level Waste
IRWST	In-containment Refuelling Water Storage Tank
ISI	In-Service Inspection
KIL	Leakage Monitoring System [LMS]
KRT	Plant Radiation Monitoring System [PRMS]
LAW	Lower Activity Waste
LLW	Low Level Waste
LLWR	Low Level Waste Repository Ltd (UK)
LRWMS	Liquid Radioactive Waste Management System
NPP	Nuclear Power Plant

OECD	Organisation for Economic Co-operation and Development
OPEX	Operating Experience
OSPAR	Oslo and Paris Convention on Protection of the Marin Environment of the North East Atlantic
PCI	Pellet-Cladding Interaction
PCER	Pre-Construction Environmental Report
PCSR	Pre-Construction Safety Report
P&ID	Process and Information Document for Generic Assessment of Candidate Nuclear Power Plant Designs
PTR	Fuel Pool Cooling and Treatment System [FPCTS]
PWR	Pressurised Water Reactor
QA	Quality Assurance
RCCA	Rod Cluster Control Assembly
RCC-M	Design and Construction Rules for Mechanical Components of PWR Nuclear Islands
RCP	Reactor Coolant System [RCS]
RCV	Chemical and Volume Control System [CVCS]
REA	Reactor Boron and Water Makeup System [RBWMS]
REN	Nuclear Sampling System [NSS]
RGP	Relevant Good Practice
RIS	Safety Injection System [SIS]
RPE	Nuclear Island Vent and Drain System [VDS]
RPV	Reactor Pressure Vessel
RRI	Component Cooling Water System [CCWS]
RSR	Radioactive Substances Regulation
RVI	Reactor Vessel Internals
RWM	Radioactive Waste Management Ltd (UK)
SCC	Stress Corrosion Cracking
SEK	Waste Fluid Collection System for Conventional Island [WFCS

	(CI)]
SEL	Conventional Island Liquid Waste Discharge Systems [LWDS (CI)]
SFA	Spent Fuel Assembly
SFIS	Spent Fuel Interim Storage
SFP	Spent Fuel Pool
SG	Steam Generator
SRE	Sewage Recovery System [SRS]
SSC	Structures, Systems and Components
TEG	Gaseous Waste Treatment System [GWTS]
TEP	Coolant Storage and Treatment System [CSTS]
TER	Nuclear Island Liquid Waste Discharge System [NLWDS]
TES	Solid Waste Treatment System [SWTS]
TEU	Liquid Waste Treatment System [LWTS]
UK HPR1000	UK version of the Hua-long Pressurised Reactor
VLLW	Very Low Level Waste
VVP	Main Steam System [MSS]
WAC	Waste Acceptance Criteria

System codes (XXX) and system abbreviations (YYY) are provided for completeness in the format (XXX [YYY]), e.g. Coolant Storage and Treatment System (TEP [CSTS]).

3.2 Introduction

This chapter presents the demonstration that the design and operation of the UK version of the Hua-long Pressurised Reactor (UK HPR1000) have been optimised through the application of Best Available Techniques (BAT). The design and operation of the UK HPR1000 contributes to the prevention and minimisation of the production, management and disposal of radioactive waste to protect the environment and members of the public. The demonstration of BAT has been developed using Generic Design Assessment (GDA) Claim-Argument-Evidence approach, Reference [1].

The requirements for environmental optimisation and the demonstration of the application of BAT are defined by the Environment Agency (EA) within the "*Process and Information Document for Generic Assessment of Candidate Nuclear Power*

Plant Designs (P&ID)", Reference [2]. These requirements are broadly consistent with the generic permit conditions that will be included in a future Site Specific Environmental Permit as presented in "*How to Comply with Your Environmental Permit for Radioactive Substances on a Nuclear Licensed Site*" from the EA, Reference [3].

The demonstration of environmental optimisation and the application of BAT for the UK HPR1000 will be performed throughout the project lifecycle (from the design stage to decommissioning).

Chapter 3 has the following structure:

a) Sub-chapter 3.1 List of Abbreviations and Acronyms:

This section lists the abbreviations and acronyms that are used in the Pre-Construction Environmental Report (PCER) Chapter 3.

b) Sub-chapter 3.2 Introduction:

This section presents the introduction of PCER Chapter 3.

c) Sub-chapter 3.3 Approach to Environmental Optimisation and Application of Best Available Techniques:

This section presents an overview of the approach to environmental optimisation and the application of BAT for the UK HPR1000.

d) Sub-chapter 3.4 Claims, Arguments and Evidence:

This section presents the Claims, Arguments and Evidence to demonstrate the application of BAT for the design and operation of the UK HPR1000.

e) Sub-chapter 3.5 Conclusions:

This section presents the conclusions.

f) Sub-chapter 3.6 References.

This section presents the references.

This chapter has interfaces with the following chapters:

T-3.2-1 Interface with Other Chapters

Chapter	Interface Relationship
PCER Chapter 5 Approach to Sampling & Monitoring	PCER Chapter 5 covers the sampling and monitoring of radioactive waste to support Claim 2 and Claim 5.

Chapter	Interface Relationship
PCER Chapter 6 Quantification of Discharges & Limits	PCER Chapter 6 provides the estimated gaseous and liquid radioactive discharges and limits to the environment to support Claim 2.
PCER Chapter 7 Radiological Assessment	PCER Chapter 7 provides the evaluation of the impact of gaseous radiological discharges on members of the public and non-human biotas to support Claim 3.

3.3 Approach to Environmental Optimisation and Application of Best Available Techniques

3.3.1 Regulatory Context

Part 4 of Schedule 23 of *the Environmental Permitting (England and Wales) Regulations 2016 (as amended)*, Reference [4], transfers the components of the European Basic Safety Standard Directive into UK act. In relation to optimisation it states that:

1. *In respect of a radioactive substances activity that relates to radioactive waste, the regulator must exercise its relevant functions to ensure that –*
    a. *All exposures to ionising radiation of any member of the public and the population as a whole resulting from the disposal of radioactive waste are kept as low as reasonably achievable, taking into account economic and social factors.*

The EA exercises this function by placing requirements in the P&ID and conditions in permits, Reference [2] and [3], that it issues for radioactive substances activities at nuclear sites which state that BAT must be applied to demonstrate that exposures have been optimised. T-3.3-1 presents the P&ID requirements and the equivalent conditions which are typically included in permits for radioactive substances at nuclear sites. The equivalent permit conditions, Reference [3], have been extracted from guidance prepared by the EA related to compliance with environmental permits for radioactive substances activities issued under *the Environmental Permitting (England and Wales) Regulations 2016 (as amended)*, Reference [4].

T-3.3-1 P&ID Requirements and Equivalent Permit Conditions

P&ID Requirement	Equivalent Permit Condition
A description of how the production, discharge and disposal of radioactive waste will be managed to protect the	*1.1.1 The operator shall manage and operate the activities:*

P&ID Requirement	Equivalent Permit Condition
environment and to optimise the protection of people.	*(a) in accordance with a written management system that is sufficient to ensure compliance with the conditions of this permit.* *1.1.2 The operator shall maintain records demonstrating compliance with condition 1.1.1.*
– *Describe the optimisation process used and identify and justify the proposed techniques as BAT.*	
– *In identifying techniques, address both the technology to be used and the way that the facility is designed and will be built, maintained, operated and dismantled.*	
– *In justifying techniques as BAT, address the following, in respect of wastes arising throughout the lifetime of the facility:*	
• *preventing and minimising (in terms of radioactivity) the creation of radioactive waste*	*2.3.1 The operator shall use the best available techniques to minimise the activity of radioactive waste produced on the premises that will require disposal of on or from the premises.*
• *minimising (in terms of radioactivity) discharges of gaseous and aqueous radioactive waste*	*2.3.2 The operator shall use the best available techniques in respect of the disposal of radioactive waste pursuant to the permit to:* *(a) minimise the activity of gaseous and aqueous radioactive waste disposed of by discharge to the environment.*
• *minimising the impact of those discharges on people and adequately protecting other species*	*2.3.2 The operator shall use the best available techniques in respect of the disposal of radioactive waste pursuant to the permit to:* *(c) dispose of radioactive waste at times, in a form, and in a manner so as to minimise the radiological effects on the*

P&ID Requirement	Equivalent Permit Condition
	environment and members of the public. *2.3.3 The operator shall use the best available techniques to:* *(a) exclude all entrained solids, gases and non-aqueous liquids from radioactive aqueous waste prior to discharge to the environment.*
• *minimising (in terms of mass/volume) solid and non-aqueous liquid radioactive wastes and spent fuel*	*2.3.2 The operator shall use the best available techniques in respect of the disposal of radioactive waste pursuant to the permit to:* *(b) minimise the volume of radioactive waste disposed of by transfer to other premises.*
• *selecting optimal disposal routes (taking account of the waste hierarchy and the proximity principle) for those wastes*	*2.3.3 The operator shall use the best available techniques to:* *(b) characterise, sort, segregate solid and non-aqueous liquid radioactive wastes, to facilitate their disposal by optimised disposal routes.*
• *the suitability for disposal of any waste and spent fuel for which there is no currently available disposal route and how they will be managed in the interim so as not to prejudice their ultimate disposal (this should take account of the view of RWM (as the UK authoritative source in providing such advice) on the disposability of such wastes and spent fuel)*	*No equivalent condition*

The EA during the development of the P&ID requirements and permit conditions has taken account of relevant conventions, recommendations, directives and policies

which include, but are not limited to those presented in T-3.3-2.

T-3.3-2 Conventions, Recommendations, Directives and Policies Relevant to BAT

Convention, Recommendation, Directive or Policy	**Relevance to BAT**
Recommendations of the International Commission on Radiological Protection (ICRP), such as ICRP60, Reference [5], and ICRP103, Reference [6].	Establishes that the process of determining what level of protection and safety makes exposures, and the probability and magnitude of potential exposures, As Low As Reasonably Achievable (ALARA), economic and societal factors being taken into account.
Radiation Protection and Safety of Radiation Sources: International Basic Safety Standards (No. GSR Part 3), Reference [7].	Principle 5 states that protection must be optimised to provide the highest level of safety that can reasonably be achieved.
European Basic Safety Standards Directive, Reference [8].	Article 5, paragraph 1b states that radiation protection of individuals subject to public or occupational exposure shall be optimised with the aim of keeping the magnitude of individual doses, the likelihood of exposure and the number of individuals exposed as low as reasonably achievable taking into account the current state of technical knowledge and economic and societal factors. The optimisation of the protection of individuals subject to medical exposure shall apply to the magnitude of individual doses and be consistent with the medical purpose of the exposure, as described in Article 56. This principle shall be applied not only in terms of effective dose but also, where appropriate, in terms of equivalent doses, as a precautionary measure to allow for uncertainties as to health detriment below the threshold for tissue reactions.

Convention, Recommendation, Directive or Policy	Relevance to BAT
Oslo and Paris Convention on Protection of the Marin Environment of the North East Atlantic (OSPAR) Convention for the Protection of the Marine Environment of the North East Atlantic, Reference [9].	States that when adopting programmes and measures for the purpose of meeting the objectives of the convention that Contracting Parties shall require, either individually or jointly, the use of BAT for point sources. Requires the progressive and substantive reductions of discharges, emissions and losses of radioactive substances with the aim of achieving concentrations in the environment of close to zero for artificial radioactive substances.
UK Strategy for Radioactive Discharges, Reference [10].	Implements OSPAR requirements and states that UK Government considers the unnecessary introduction of radioactivity into the environment as undesirable even if doses are low and unlikely to cause harm. Also states that, in setting discharge limits, the regulators will have regard to the application of BAT.
Policy for the Long Term Management of Solid Low Level Radioactive Waste in the United Kingdom, Reference [11].	States that plans are required for the management of Low Level Waste (LLW) at all nuclear sites and the consideration of all practicable options for the management of LLW. Requires the use of the waste hierarchy (prevent, re-use, recycle, recover, dispose) and a risk informed approach to ensure that doses to people from disposals are as low as reasonably achievable.

The EA has produced the guidance presented in T-3.3-3 which has been used to inform the *BAT Methodology*, Reference [1].

T-3.3-3 EA Guidance Relevant to BAT

Requirement	Relevance to BAT
Radioactive Substances Regulation (RSR): Principles of Optimisation in the Management of and Disposal of Radioactive Waste, Reference [12].	Provides a definition of BAT. Defines the legal and policy framework for optimisation. Establishes the basis on which judgements have to be made. Defines principles for optimisation. Requires a demonstration that BAT is being applied to achieve an optimised outcome.
Regulatory Guidance Series No. RSR 2, The Regulation of Radioactive Substances Activities on Nuclear Licensed Sites, Reference [13].	High level and policy guidance on how the EA regulates radioactive substances activities on nuclear licensed sites under EPR16. Recognises requirements on operators to protect people and the environment by minimising the generation of radioactive waste, minimising the amount of radioactive waste that has to be discharged to the environment and discharging that waste in ways that minimises the resulting radiological impact on the public and protects the wider environment.
Criteria for Setting Limits on the Discharge of Radioactive Waste from Nuclear Sites, Reference [14].	States the requirement for operators to apply BAT. Identifies relevant provisions of the statutory guidance that require limits to be set based on BAT. Explains the relationship between BAT and discharge limits
Radioactive Substances Regulation - Environment Principles, Reference [15].	Forms part of consistent and standardised framework for technical assessments and judgements undertaken by the EA. Identifies a range of topics to take into account when determining whether BAT is being applied.

3.3.2 BAT Principles

In the case of demonstrating BAT, the objectives and principles of environmental optimisation in the UK HPR1000 is to deliver the following:

a) Enabling the Nuclear Power Plant (NPP) to operate efficiently and safely;

b) Preventing or, where that is not practicable, reducing emissions to water, air and land (including waste);

c) Optimising the overall control scheme for all gaseous waste, liquid waste and solid waste, and optimising the whole process from generation to disposal of waste to achieve the best environmental, economic and social benefits which contribute to sustainable development;

d) Consideration of the waste hierarchy and waste form;

e) The precautionary principle;

f) The proximity principle;

g) Ensuring that individual exposure dose, the number of persons exposed to radiation and the possibility of exposure to radiation are maintained at a level as low as reasonably achievable with considerations of economic and social factors;

h) Achieving a high level of protection for people and the environment as a whole;

i) Application of Relevant Good Practice (RGP);

j) Complying with regulations; and

k) Adopting a proportionate, open and transparent approach.

The demonstration of BAT for the UK HPR1000 will build on the evidence from comparable plants. This evidence base will be reviewed, challenged and augmented as part of the development of the demonstration of BAT. The approach that has been developed to support the application and demonstration of BAT is based on existing practice and consists of the following three pillars:

a) **Evolution.** Evidence will be provided that demonstrates how the design of the UK HPR1000 and the equivalent processes and activities in similar plants have evolved and contributed to their optimised performance. This Evidence will form part of the evidence base that will be used to develop and substantiate BAT Arguments for the design and operation of the UK HPR1000.

b) **Integration**. The application of BAT is an integral part of the management system which includes the methodologies and procedures that will ensure that the design and operation of the UK HPR1000 can be demonstrated to be BAT. Integration of BAT into the management system ensures that all of the design principles are taken into account during design development and review.

c) **Opportunity**. A forward action plan will be used to identify when decisions should be made to maximise the opportunity to realise the greatest benefit in terms of environmental optimisation.

The UK HPR1000 BAT Methodology takes account of a number of key principles taken from the UK regulator and industry guidance, Reference [16]. These principles will be referenced within the Claims and Arguments of the demonstration of BAT.

It is recognised that BAT must be applied and demonstrated throughout all elements of the UK HPR1000 project lifecycle from design to decommissioning.

3.3.3 BAT Methodology

The '*BAT Methodology*' report, Reference [1], defines UK HPR1000 BAT methodology that is being implemented to support the demonstration of the application of BAT for the UK HPR1000. The methodology proposes a systematic and evidence based approach that aims to demonstrate that the design, manufacture, construction, commissioning, operation and decommissioning of the UK HPR1000 will be optimised to protect members of the public and to minimise the impact on the environment from exposure to ionising radiation.

It is recognised the importance of ensuring that the design of the UK HPR1000 has been fully assessed and demonstrated to be both BAT (demonstrated in PCER Chapter 3) and As Low As Reasonably Practicable (ALARP) (demonstrated in the Pre-Construction Safety Report (PCSR)) in order to demonstrate that dose to both workers and the public have been optimised.

As such a '*Requirements on Optioneering & Decision-Making*' procedure has been developed, Reference [17], which sets out a framework for managing all potential enhancements (gaps and uncertainties). Potential enhancements will be assessed in accordance with both BAT and ALARP principles whist also reflecting the UK expectations of security and conventional safety.

The BAT Methodology incorporates the Claim-Argument-Evidence approach that is commonly used in the UK for nuclear new build projects. This approach has successfully been used by other GDA requesting parties in the UK and prospective UK site operators to demonstrate the application of BAT.

A number of procedures have been developed or are under development that will support the demonstration and the application of BAT. These procedures include:

a) Competency and training;

b) Quality Assurance (QA);

c) Organisational learning;

d) Change control; and

e) Record keeping.

An overview of the relevant parts of the requesting party's management arrangements is provided in *PCSR Chapter 20 MSQA and Safety Case Management*, Reference [18]. The development and subsequent implementation of these procedures will collectively support the on-going and iterative optimisation of the design and operation of the UK HPR1000.

This BAT methodology facilitates the demonstration that the design and operation of the UK HPR1000 have been optimised by:

a) Preventing and minimising (in terms of radioactivity) the creation of radioactive waste;

b) Minimising (in terms of radioactivity) discharges of gaseous and aqueous radioactive wastes;

c) Minimising the impact of those discharges on people, and adequately protecting other species;

d) Minimising (in terms of mass/volume) solid and non-aqueous liquid radioactive wastes and spent fuel;

e) Selecting optimal disposal routes (taking account of the waste hierarchy and the proximity principle) for those wastes; and

f) The suitability for disposal of any wastes and spent fuel for which there is no currently available disposal route and how they will be managed in the interim so as not to prejudice their ultimate disposal (this should take account of the view of Radioactive Waste Management Ltd (RWM) (as the UK authoritative source in providing such advice) on the disposability of such wastes and spent fuel).

A schematic diagram of the BAT methodology implemented is outlined in F-3.3-1.

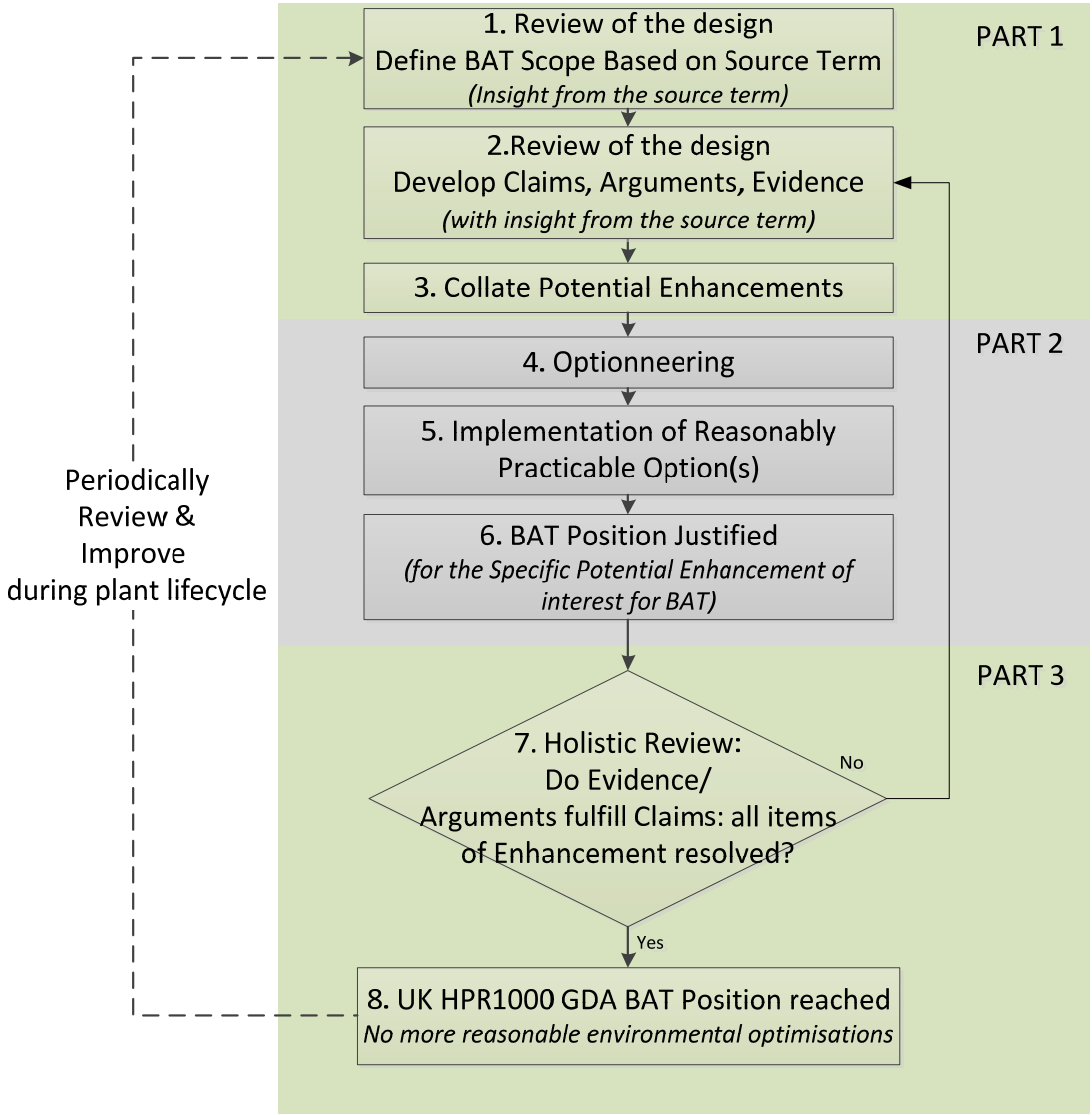

F-3.3-1 Schematic Diagram of the BAT Methodology

Note:

Part 1 is the holistic process to support development of the demonstration of BAT.

Part 2 is the specific review of potential enhancements.

Part 3 is the holistic BAT evaluation and review.

3.4 Claims, Arguments and Evidence

This section demonstrates the application of BAT using the approach of Claim-Argument-Evidence:

a) Claim - A statement of what is being sought in terms of environmental optimisation;

b) Argument - an element which contributes to achieving a Claim (or Claims) and which links the Evidence to the Claim. This element can be deterministic,

qualitative and/or quantitative. The Argument contributes to the demonstration that a Claim is valid;

c) Evidence - which is used as the basis of the Argument i.e. how the Argument can be validated and which allows further examination if required. Evidence can be facts or assumptions.

F-3.4-1 presents the schematic diagram of Claim-Argument-Evidence structure.

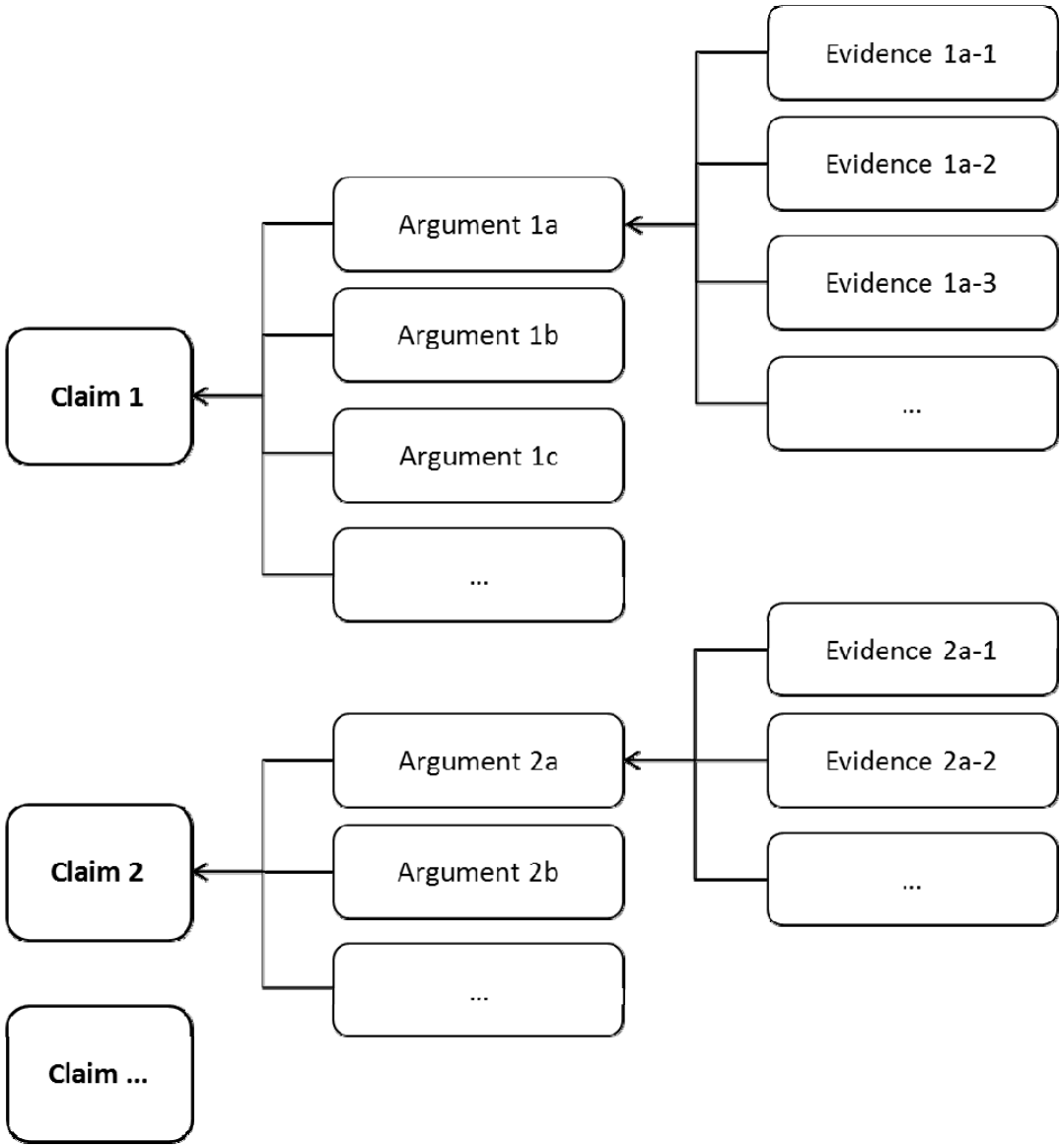

F-3.4-1 Schematic Diagram of Claim-Argument-Evidence Structure

Five Claims have been developed based on the requirements of the P&ID and form the main structure of the Demonstration of BAT for the UK HPR1000:

a) Claim 1: Prevent and Minimise the Creation of Radioactive Waste;

b) Claim 2: Minimise the Radioactivity of Gaseous and Aqueous Radioactive Wastes Discharged into the Environment;

c) Claim 3: Minimise the Impact of Discharges on People and Non-Human Biotas;

d) Claim 4: Minimise the Mass/Volume of Solid and Non-Aqueous Liquid Radioactive Wastes and Spent Fuel;

e) Claim 5: Select the Optimal Disposal Routes for Wastes.

When taken together the Arguments, Evidence and the programme of work are provided to demonstrate that each Claim has been proportionately validated in accordance with those requirements of the P&ID that relate to BAT.

3.4.1 Claim 1: Prevent and Minimise the Creation of Radioactive Waste

The generation of radioactive waste is undesirable due to the potentially harmful impacts on members of the public and the environment. The UK HPR1000 has been designed to prevent and minimise the generation of radioactive waste.

This Claim demonstrates that the design and operation of the UK HPR1000 has been optimised in accordance with the following P&ID requirement, Reference [2]:

- *Preventing and minimising (in terms of radioactivity) the creation of radioactive waste.*

The Arguments and Evidence presented within this Claim have been structured to allow a future operator to review, assess and, if applicable adopt them as part of the demonstration of compliance with the following standard permit condition that will form part of a future site specific Environmental Permit, Reference [3]:

- *Environmental Permit Condition 2.3.1 'The operator shall use the best available techniques to minimise the activity of radioactive waste produced on the premises that will require to be disposed of on or from the premises.'*

In developing the Arguments presented to demonstrate the validity of Claim 1, the following *Radioactive Substances Regulation - Environmental Principles*, Reference [15], are considered to be relevant and have been taken into account:

- *Principle RSMDP3 'the best available techniques should be used to ensure that production of radioactive waste is prevented and where that is not practicable minimised with regard to activity and quantity.'*
- *Principle ENDP1 'The underpinning environmental aim for any facility should be that the design inherently protects people and the environment, consistent with the operational purpose of the facility.'*

The current Claim-Argument-Evidence structure for Claim 1 is presented in T-3.4-1.

T-3.4-1 Claim-Argument-Evidence Structure for Claim 1

3.4.1 Claim 1: Prevent and Minimise the Creation of Radioactive Waste
3.4.1.1 Argument 1a: Minimise the Concentration of Fission Products in the Primary Coolant by the Design, Manufacture and Management of Fuel
3.4.1.1.1 Evidence 1a-1: Causes of Fuel Failure
3.4.1.1.2 Evidence 1a-2: Grid to Rod Fretting Performance
3.4.1.1.3 Evidence 1a-3: Debris Removal
3.4.1.1.4 Evidence 1a-4: Minimisation of Manufacturing Defects
3.4.1.1.5 Evidence 1a-5: Corrosion Resistance of Cladding Tube
3.4.1.1.6 Evidence 1a-6: Pellet-Cladding Interaction Fuel Failure Risk Mitigation
3.4.1.1.7 Evidence 1a-7: Minimisation of Fissionable Material Contamination
3.4.1.1.8 Evidence 1a-8: Detection and Management of Failed Fuel Assemblies
3.4.1.1.9 Evidence 1a-9: Fuel Handling and Storage System
3.4.1.1.10 Evidence 1a-10: In-process Sampling and Monitoring to Detect Fuel Failures
3.4.1.2 Argument 1b: Minimise the Quantity of Spent Fuel by Core Dimension Design and Cycle length Selection
3.4.1.2.1 Evidence 1b-1: Core Dimension
3.4.1.2.2 Evidence 1b-2: Cycle Length
3.4.1.3 Argument 1c: Minimise the Generation of Tritium in the Primary Coolant
3.4.1.3.1 Evidence 1c-1: Use of Zircaloy Cladding for Fuel Rods
3.4.1.3.2 Evidence 1c-2: Optimised Boron Concentration

3.4.1.3.3 Evidence 1c-3: Use of Lithium-7 Enriched Lithium Hydroxide
3.4.1.3.4 Evidence 1c-4: Optimisation of Use of Secondary Neutron Sources
3.4.1.4 Argument 1d: Minimise the Radioactivity of Waste by Optimising the Water Chemistry in the Primary Coolant
3.4.1.4.1 Evidence 1d-1: Application of ^{7}LiOH
3.4.1.4.2 Evidence 1d-2: Hydrogen Dosing
3.4.1.4.3 Evidence 1d-3: Control of Impurities
3.4.1.4.4 Evidence 1d-4: Development of Chemistry Regime
3.4.1.5 Argument 1e: Minimise Activated Corrosion Products through Material Selection
3.4.1.5.1 Evidence 1e-1: Minimise or Substitute Activated Elements in Structure and Component Materials
3.4.1.5.2 Evidence 1e-2: Minimise the Corrosion Products by Using Corrosion-Resistant Materials
3.4.1.6 Argument 1f: Minimise Carbon-14 Production
3.4.1.6.1 Evidence 1f-1: Control of Nitrogen-14 Concentration in the Primary Coolant

3.4.1.1 Argument 1a: Minimise the Concentration of Fission Products in the Primary Coolant by the Design, Manufacture and Management of Fuel

Radioactive waste is an unavoidable by-product of electricity generation by a nuclear reactor. The fuel pellets located inside of the fuel and fissionable material contamination on the surface of the fuel cladding are the main sources of fission products that can become entrained within the primary coolant and ultimately become radioactive waste. Therefore, it is important to prevent fission products from leaking out of the fuel into the primary coolant and to minimise any fissionable material contamination to prevent the formation of fission products within the primary coolant.

For this reason, the design and manufacturing of fuel and the design and operation of light water reactors has evolved to include a range of techniques that contribute to:

a) The retention of fission products within the fuel rod by minimising the likelihood

of a fuel failure; and

b) Minimising fissionable material contamination on the surface of the fuel cladding.

Techniques are also provided within the UK HPR1000 to detect fuel failures and to allow the future operator to manage fuel rods that have failed.

The International Atomic Energy Agency (IAEA) produced a study that identified the following causes of fuel rod failure in water cooled reactors (Evidence 1a-1: Causes of Fuel Failure) that have occurred in worldwide fleets between 1994 and 2010:

a) Grid to Rod Fretting (GTRF);

b) Debris related failures;

c) Fabrication related failures;

d) Corrosion related failures; and

e) Pellet-Cladding Interaction (PCI) type failures.

The nuclear industry has collectively developed techniques that have reduced the frequency of fuel rod failures.

The IAEA identifies that GTRF has historically been the dominant cause of fuel failure in operational Pressurised Water Reactors (PWRs) (Evidence 1a-2: Grid to Rod Fretting performance). Advanced fuel types including the one being used for the UK HPR1000 have also contributed to a reduction in global GTRF failure rates.

The second most common cause of fuel rod failure results from debris within the primary circuit. Fuel failures resulting from debris can result from foreign objects introduced into the primary circuit from external sources (e.g. loose metallic material such as wire) and debris that originates from within the primary circuit, including corrosion products (Evidence 1a-3: Debris Removal). The nuclear industry has developed the following techniques that contribute to reducing both internal and external debris:

a) Introduction of increasingly robust QA procedures to minimise the likelihood that external debris will be left within the primary circuit prior to active commissioning;

b) Introduction of increasingly robust pre-commissioning inspection regimes to identify and remove external debris;

c) Maintain the primary circuit water chemistry to minimise the generation of corrosion products (Argument 1d: Minimise the Radioactivity of Waste by Optimising the Water Chemistry in the Primary Coolant);

d) Provide water clean-up systems that abate corrosion products that become

entrained in the primary coolant (Argument 1d: Minimise the Radioactivity of Waste by Optimising the Water Chemistry in the Primary Coolant);

e) Introduction of thresholds to ensure that debris on the surface of fuel is removed or reduced to an acceptable level prior to dispatch from the fuel vendor.(Evidence 1a-3: Debris Removal)

The nuclear industry, including fuel vendors, have also developed techniques to improve the resistance of fuel cladding to debris related fuel failures and to introduce debris filters as an inherent part of modern fuel design.

The combination of minimising debris within the primary coolant circuit and improving fuel design and manufacturing processes has reduced the frequency of debris related fuel failures in light water reactors.

The third most common cause of historical fuel rod failures is fabrication related failures (Evidence 1a-4: Minimisation of Manufacturing Defects). The introduction of enhanced manufacturing equipment and improvements in manufacturing processes, including automated process control, has resulted in fuel rod failures resulting from manufacturing defects being at very low levels.

Techniques that have been introduced to minimise the potential of other causes of fuel failure include:

a) **Corrosion related failures.** The introduction of cladding materials that are increasingly resistant to corrosion **(**Evidence 1a-5: Corrosion Resistance of Cladding Tube)

b) **PCI type failures.** PCI type fuel rod failures are rare within PWR's due to the optimised fuel rod design that allows for pellet expansion and restricted power ramp-up rates during reactor start–up. Inspections of the fuel pellet during manufacture also ensure that the fuel pellet meet stringent specifications that also contribute to minimising PCI type failures (Evidence 1a-6: Pellet-Cladding Interaction Fuel Failure Risk Mitigation).

The nuclear industry has also developed techniques to identify any fuel that has failed prior to being loaded into the reactor and techniques to detect and subsequently manage fuel that fails during the fuel cycle (Evidence 1a-8: Detection and Management of Failed Fuel Assemblies). These measures include:

a) Inspection of fuel prior to loading into the core;

b) In-process monitoring techniques to detect a fuel rod failure that occurs during the fuel cycle;

c) In-process monitoring techniques to identify and detect the severity of a fuel failure during the unloading of fuel;

d) Provision of facilities that allow operators to isolate failed fuel rods to minimise the spread of contamination;

e) Provision of techniques to allow a failed fuel rod to be replaced with a stainless steel rod to allow the remaining fuel bundle to be reused.

In addition to the techniques that have been introduced to prevent, detect and manage fuel rod failures the nuclear industry has also developed techniques to minimise the presence of fissionable material contamination on the surface of fuel pin cladding (Evidence 1a-7: Minimisation of Fissionable Material Contamination). Manufacturers have introduced improvements in the pellet loading process and upper end plug weld process that minimise the potential for uranium oxide to spread onto external surfaces or to leak from unsealed rods. Manufactured rods also undergo stringent inspection and testing to ensure that surface contamination is below specified limits.

The causes of fuel failure and measures that mitigate these causes have been identified and progressively implemented throughout the nuclear industry. Collectively these measures have:

a) Minimised the frequency of fuel failures in operational light water reactors;

b) Improved the techniques used to detect and subsequently manage failed fuel; and

c) Minimise fissionable material contamination on the surface of fuel pin cladding.

At GDA, the STEP-12 fuel has been selected for the UK HPR1000. The design and manufacture of STEP-12 fuel has been optimised in accordance with nuclear industry best practice and operational experience and feedback of China General Nuclear Power Corporation (CGN). The design of STEP-12 includes the features that will minimise the frequency and severity of fuel failures. The QA processes have been optimised to minimise causes of fuel failure associated with manufacturing and to minimise surface radioactive contamination. Operational specifications will be provided to the future operator which will define requirements relating to the operation of the UK HPR1000 that will also contribute to minimising the likelihood of a fuel failure. The design of the UK HPR1000 also includes techniques that will detect and allow the future operator to manage failed fuel. Collectively these measures contribute to the demonstration that BAT has been applied to the design and manufacturing of fuel and to the detection and management of fuel failures.

3.4.1.1.1 Evidence 1a-1: Causes of Fuel Failure

The *Review of Fuel Failures in Water Cooled Reactors*, Reference [19] and the *Results of the IAEA Study of Fuel Failures in Water Cooled Reactors in 2006-2010*, Reference [20], identified the following primary causes of fuel rod failure:

<u>Grid to rod fretting (GTRF)</u>

The position of PWR fuel rods is maintained by the friction between elastic

components in structural grids which allow rod dimension change during irradiation. Usually, unavoidable fretting occurs between the fuel rod and the spacer grid because of coolant turbulence excitation. The wear caused by the GTRF can cause fuel rod cladding failure.

Debris related failures

Debris that is entrained in the primary circuit that passes through the bottom nozzle has the potential to cause failures fuel cladding failures.

Fabrication related failures

Fabrication related failures are caused by manufacturing defects, such as end plug welding defects.

Corrosion related failures

Corrosion of fuel cladding has two types of effect on the generation of radioactive waste. The first mechanism is excessive corrosion of the fuel cladding resulting in a degradation of the cladding material properties, and most importantly the cladding thermal conductivity. This will increase the metal/oxide interface temperature by decreasing the thermal conductivity which results in an increase in the corrosion rate. Ultimately this process will increase the likelihood of a fuel rod failure. The second mechanism results from corrosion products detaching from the surface of the fuel rod and entering into the primary circuit as radioactive waste.

Pellet-Cladding Interaction (PCI) type failures

During irradiation in the core, especially in anticipated operational fluctuations, the fuel rod cladding may be subjected to high stresses and strains due to the differential expansion of the pellet and the cladding, combining with aggressive fission products, which could lead to Stress Corrosion Cracking (SCC) of the fuel rod cladding and eventually result in fuel failure.

3.4.1.1.2 Evidence 1a-2: Grid to Rod Fretting Performance

GTRF has historically been the dominant cause of fuel failure in PWRs worldwide. However, the high failure rate identified by the IAEA reports, Reference [19] and [20], is predominantly the result of specific reactor design with regard to flow distribution, such as high velocity jetting between baffle sides, high cross flow at lower span, which would cause severe fuel rod vibration or even instability. The utilisation of advanced fuel types has also contributed to a decrease in global GTRF failure rates. The GTRF performance of modern fuel types has been greatly improved by increased contact area and low relaxation spring design. These advanced features are adopted in STEP-12 fuel design. Comprehensive analysis and tests prove that GTRF performance has been optimised. It is not expected to experience fretting wear issues during normal operation, Reference [21].

3.4.1.1.3 Evidence 1a-3: Debris Removal

The second most common cause of fuel failure is the fretting by debris. Measures that have been introduced to minimise the debris related fuel failure include improvements in fuel design and manufacturing.

The debris has been identified as external and internal debris.

External debris originates from loosened metallic material, such as machining chips introduced into the coolant during repair or maintenance operations. Anti-debris devices have been introduced into the design of PWR fuel assemblies to provide the greatest protection to the fuel assembly against debris, Reference [19]. The STEP-12 fuel assembly used in UK HPR1000 is also equipped with an anti-debris device. It features holes which can prevent debris in the primary coolant from passing through the nozzle. The performance of the anti-debris device of STEP-12 fuel assembly is tested in a hydraulic loop. Different kinds of debris with various sizes are introduced in the loop. The test results demonstrate the excellent filtering efficiency of the anti-debris device, Reference [22].

Internal debris is introduced during the process of fuel assembly manufacturing, which mainly contains scratched zirconium chips generated by the fuel rod loading, and can be trapped in grid cells. The cleanliness requirement during fuel assembly ensures that debris is removed or reduced to an acceptable level, Reference [23].

3.4.1.1.4 Evidence 1a-4: Minimisation of Manufacturing Defects

The third cause of fuel failure is fabrication related failures. With the enhanced manufacturing equipment and the improvements in manufacturing processes, like automated process control, the manufacturing defects have decreased over the years and are at a low level, Reference [19]. The manufacturing defects contain mainly leaking end plugs and welding defects in PWRs. To eliminate these defects, several actions have been taken.

a) Each fuel rod shall be helium leak-tested; a rejection threshold shall be set so that any rod with a leak rate exceeding the leak standard will not be loaded into the UK HPR1000, Reference [23].

b) The weld soundness of each fuel rod shall be inspected by X-ray examination in accordance with the applicable inspection process specification.

c) Absence of cavities, cracks and non-fused zones shall be guaranteed by visual inspection of each fuel rod.

These measures will ensure that the fuel rod is free of manufacturing defects prior to it being loaded into the UK HPR1000.

3.4.1.1.5 Evidence 1a-5: Corrosion Resistance of Cladding Tube

Corrosion related failure is also a cause of fuel leaks in PWRs. UK HPR1000's fuel cladding is manufactured from CZ which is a zirconium alloy developed by CGN. CZ alloy is recognised for prevention of fuel failure resulting from corrosion. It therefore also contributes to minimise the radioactive waste by way of producing less corrosion products. The corrosion resistance of CZ alloy is superior to Zircaloy-4. The oxide thickness of CZ alloy used in UK HPR1000 is lower than that of Zircaloy-4, Reference [24].

3.4.1.1.6 Evidence 1a-6: Pellet-Cladding Interaction Fuel Failure Risk Mitigation

PCI is a rare cause of fuel failures in PWR-type fuel rods due to the optimised design of the fuel rods and restricted power ramp-up rates during reactor start-up. The pellets are designed with dishes at both ends and chamfered edges to accommodate the expansion during operation. The operation restrictions, including controlled power escalation rates and control rod movement limits, are applied to mitigate the risk of PCI type failures. Furthermore, fuel fabrication can directly impact the PCI. Inspections related to pellet outer diameter and pellet surface roughness and defect are performed during the fabrication process to verify that pellets meet material specifications. Sampling is also conducted by quality inspectors, to ensure that Acceptable Quality Level are both defined and met in order to ensure pellet quality, Reference [23].

3.4.1.1.7 Evidence 1a-7: Minimisation of Fissionable Material Contamination

Any fissionable material contamination usually attached on the surface of fuel elements from the manufacturing process, has the potential to undergo nuclear fission and to generate fission products that will enter the coolant. Manufacturing, the pellet loading process and the upper end plug weld process for unsealed uranium oxide rods could spread fissionable material contamination onto the fuel rod surface. Measures are taken to minimise fissionable material contamination during manufacturing. For example, any uranium or uranium dioxide dust spread in the air should be removed by Heating, Ventilation and Air Conditioning (HVAC) systems in the workshop. The cleanliness requirements during fuel assembly also ensure the contaminants are removed or minimised to an acceptable level, Reference [23]. The manufacturer will have developed Quality Assurance (QA) processes that minimise the potential for the external surfaces of its fuel to become contaminated with fissionable materials during manufacturing according to the applicable specification.

3.4.1.1.8 Evidence 1a-8: Detection and Management of Failed Fuel Assemblies

The UK HPR1000 design will enable the detection and management of the failed fuel assemblies so as to help prevent or minimise fuel fission debris from entering into the primary coolant. For the irradiated fuel assemblies unloaded from the reactor, there are two types of examination facilities to detect whether the fuel assembly is damaged

or not.

The first one is the on-line sipping test facility, which is installed on the refuelling machine located inside the reactor containment. It is used to qualitatively detect whether the fuel assembly is damaged during unloading. The on-line sipping test facility is equipped with a gamma activity measurement unit, which is used to monitor the gamma activity concentration of fission products released from the fuel assembly. Once the gamma activity concentration exceeds the defined threshold, a sound and light alarm will be actuated, and will indicate that the fuel assembly is potentially damaged, and then it will be sent to the off-line sipping test facility for further inspection.

The second test is the off-line sipping test facility, which is installed in the spent fuel pool. Detailed quantitative tests will be carried out for the suspected damaged fuel assemblies, based on the result of the on-line sipping test facility. For the off-line sipping test facility, the damage assessment of the fuel assembly is based on the gamma activity concentration of the fission nuclides and the analysis of water and gas samples extracted by the off-line sipping test facility. The fuel assembly can be heated in the airtight sleeve of the off-line sipping test facility, and it will promote the release of the fission nuclides inside the cladding. By comparing the gamma activity concentration of the fission nuclides before and after heating up, the operator can qualitatively detect leaks in the fuel assembly and quantify the size of any crack or fault.

Once the defect of a fuel assembly is confirmed, it will be transferred to the special storage cell with a filter in the underwater storage rack to prevent the fuel fragment dissemination, and the damaged fuel assemblies will not be reloaded into the reactor core.

The detailed design of the on-line and off-line sipping test facility will be described in technical specification.

3.4.1.1.9 Evidence 1a-9: Fuel Handling and Storage System

The fuel handling and storage system is designed to prevent damage to the fuel assembly by minimising the risks of dropping or collision during operation, thereby avoiding the production of additional radioactive material.

To minimise the risks of dropping the fuel assembly, the fuel handling and storage system has taken account of the following design measures:

a) The fuel handling devices are designed to prevent the fuel assemblies from dropping due to a single failure or a single human error;

b) The fuel handling devices are designed to withstand the loads during a safe shutdown earthquake. That means the equipment can prevent the fuel assemblies from dropping during the postulated seismic condition;

c) The lifting mechanism of fuel handling devices are provided with redundant brakes, and each brake can hold the load independently;

d) The fuel handling device and tools are equipped with mechanical locking devices that prohibit the incorrect release of fuel assemblies;

e) The lifting mechanisms of fuel handling devices are equipped with real-time load cells to monitor the fuel handling process, so that the fuel hoisting will be stopped if it is blocked.

To minimise the risks of collision or seizing, the fuel handling and storage system has taken account of the following design measures:

a) Boundary protection is provided in the irradiated fuel handling devices by interlock controls that keep the fuel assemblies away from obstacles;

b) A proper fuel handling route is designed to ensure there is enough safe space between the fuel assembly and other items during transfer;

c) Interlocks are provided between two relevant devices which must operate to prevent fuel assemblies from colliding during the transfer operation;

d) The fuel handling devices are equipped with speed detectors to continuously monitor the transfer speed. When over speed occurs, the brakes of the fuel handling device will be actuated to stop the on-going movement.

The design and operation of fuel handling and storage systems and equipment will be based on the mature design of the reference design, Hua-long Pressurised Reactor under construction at Fangchenggang nuclear power plant unit 3 (HPR1000 (FCG3)). This design has been further optimised based on operational experience and feedback. The detailed design of the fuel handling and storage system is substantiated in *PCSR Chapter 28 Fuel Route and Storage*, Reference [25].

3.4.1.1.10 Evidence 1a-10: In-process Sampling and Monitoring to Detect Fuel Failures

In-process sampling and monitoring to detect fuel failure is provided by Nuclear Sampling System (REN [NSS]) and Plant Radiation Monitoring System (KRT [PRMS]).

Two continuous radioactivity monitoring channels are provided by KRT [PRMS], Reference [26]. These include a gamma-sensitive detector located on the letdown line of Chemical and Volume Control System (RCV [CVCS]) and a gamma-sensitive detector located on the REN [NSS] line connected to the primary coolant. The two monitors provide redundancy (functional redundancy). The gamma dose rate of the primary reactor coolant is used to detect degradation of the fuel cladding.

Two alarm levels are set, the level 1 alarm is used to identify normal variations in the

radioactivity in primary coolant and level 2 alarm identifies an increase in radioactivity associated with fuel cladding failure. When level 1 alarm threshold is exceeded, the operator will closely monitor any increase in the measured value. If the level 2 alarm threshold is exceeded, it will initiate automatic closing of the containment isolation valves of RCV [CVCS], REN [NSS] and Nuclear Island Vent and Drain System (RPE [VDS]) and emergency operation procedures will be applied.

In addition to online monitors, liquid samples from the Reactor Coolant System (RCP [RCS]) are collected by the REN [NSS] from three different positions:

a) The hot leg of loop 2 for the RCP [RCS];

b) The pressuriser (liquid phase); and

c) The hot leg of loop 3 for the RCP [RCS].

The radiological parameters including the radioactivity of iodine, noble gases, total gamma, total alpha, and total beta as well as the gamma spectrum will be measured and analysed in the laboratory. This will provide detailed information on the fuel cladding failure. Under normal operation, the samples are collected periodically, and if abnormal conditions are detected, the frequency of collecting samples will be increased.

3.4.1.2 Argument 1b: Minimise the Quantity of Spent Fuel by Core Dimension Design and Cycle length Selection

The generation of electricity by the UK HPR1000 will result in the generation of spent fuel. Fresh fuel is usually retained in the reactor core for two to four fuel cycles before it is removed from the core as spent fuel. Spent fuel contains radioactive isotopes with long half-life including neptunium and americium whose decay periods are expressed in the order of hundreds of years, resulting in very long storage periods for spent fuel. Therefore, maximising the efficiency of the UK HPR1000 to minimise the generation of spent fuel will minimise the amount of spent fuel that will require management in highly engineered facilities that are designed to protect the public and the environment. Since the efficiency of fuel usage and the amount of spent fuel are related, minimising the amount of spent fuel generated over the operational lifetime of the UK HPR1000 will be achieved by improving the fuel economic performance. The fuel economic performance can be measured by the amount of fresh fuel used per unit of energy production.

The amount of fuel used per unit of energy production in the UK HPR1000 has been minimised by optimising the core dimension and the fuel cycle length. Calculations to demonstrate that a core design with 177 fuel assemblies minimises the amount of fuel used per unit of energy production compared to core designs with less fuel assemblies have been performed (Evidence 1b-1: Core Dimension). Calculations to demonstrate that a fuel cycle length of 18-months minimises the amount of fuel used per unit of

energy production have also been performed (Evidence 1b-2: Cycle Length). In order to minimise the amount of spent fuel that will be generated during the operation of the UK HPR1000 the design includes a 177-assembly core and is based on an 18-month fuel cycle length.

It is demonstrated that the UK HPR1000 reactor core design and the fuel cycle length contributes to minimising the amount of spent fuel that is generated. It should be noticed that the selected fuel cycle length at GDA is a result of a comprehensive consideration.

3.4.1.2.1 Evidence 1b-1: Core Dimension

Compared to the Chinese Pressurised Reactor (CPR1000), the UK HPR1000 has a greater core diameter while its core height remains unchanged. By convention, this could reduce radial neutron leakage. Thus, HPR1000 core requires less fresh fuel assemblies than CPR1000 for the same energy production.

With the assumption of using the same type of fuel assemblies, calculations show that the UK HPR1000 will generate 72 spent fuel assemblies every 18 months, compared to the CPR1000 which discharges an average of 70 spent fuel assemblies every 18 months. When divided by the total core thermal power, the UK HPR1000 consumes 2.29E-2 fuel assemblies per 1MW thermal power compared with the CPR1000 which consumes 2.42E-2 fuel assemblies per 1MW.

3.4.1.2.2 Evidence 1b-2: Cycle Length

The number of fresh fuel assemblies required for each cycle depends on the fuel cycle length.

Specified calculations for the CPR1000 has been performed which demonstrate that for an 18-month fuel cycle 47 spent fuel assemblies will be generated per year while the traditional 12-month fuel cycle with high neutron leaking loading will produce 52 spent fuel assemblies per year. A 24-month fuel cycle will result in the number of produced spent fuel assemblies generated per year as greater than 52. The relationship between spent fuel quantity and cycle length for the UK HPR1000 shares the same trend. As a result, an 18-month fuel cycle length has been selected to minimise the amount of spent fuel.

3.4.1.3 Argument 1c: Minimise the Generation of Tritium in the Primary Coolant

Tritium is a low energy pure beta emitter radionuclide with a half-life of about 12.3 years, which is one of the most significant radionuclides in the total activity of liquid discharge to the environment during normal operation. Tritium cannot be disposed and abated by the conventional radioactive waste management system. It is mainly produced by ternary fission reactions in the fuel, neutron reaction of the soluble boron and lithium in the coolant, as well as neutron reaction of beryllium contained in the secondary neutron source rods.

To minimise the generation of tritium in the primary coolant in UK HPR1000, several measures have been applied. Zircaloy claddings from which very little proportion of tritium can go through are used for fuel rods. Optimised boron concentrations coordinated with the use of burnable poisons are designed. Lithium-7 enriched lithium hydroxide is applied in the primary coolant. Also the use of secondary neutron sources will be optimised to minimise the generation of tritium.

3.4.1.3.1 Evidence 1c-1: Use of Zircaloy Cladding for Fuel Rods

There is a large amount of tritium inventory from ternary fission reactions in the fuel, which is a potential source of tritium in the primary coolant. Zircaloy claddings are used for fuel rods in UK HPR1000. Compared to stainless steel cladding, only a very small proportion of tritium can be released through Zircaloy to the primary loops, Reference [27]. It has been demonstrated that the total fractional release of tritium from Zircaloy is as low as 3.5×10^{-3} for the effusion test, therefore the contribution of fuel to the tritium in the coolant is negligible, Reference [28].

3.4.1.3.2 Evidence 1c-2: Optimised Boron Concentration

Soluble boric acid is the main chemical poison dissolved in the coolant to control the reactivity and is widely used to control the reactivity in PWRs. However, boron especially the isotope boron-10 is also the main source of tritium produced in PWRs. The generation reactions of tritium produced by boron-10 are listed as follows.

$$^{10}_{5}B+^{1}_{0}n \xrightarrow{(n,2\alpha)} 2\,^{4}_{2}He+^{3}_{1}H \qquad (3.4.1\text{-}1)$$

$$^{10}_{5}B+^{1}_{0}n \xrightarrow{(n,\alpha)} ^{7}_{3}Li+^{4}_{2}He \qquad (3.4.1\text{-}2)$$

$$^{7}_{3}Li+^{1}_{0}n \xrightarrow{(n,n\alpha)} ^{4}_{2}He+^{1}_{0}n+^{3}_{1}H \qquad (3.4.1\text{-}3)$$

$$^{11}_{5}B+^{1}_{0}n \xrightarrow{(n,T)} ^{9}_{4}Be+^{3}_{1}H \qquad (3.4.1\text{-}4)$$

Burnable poisons are used to provide partial control of the excess reactivity during the fuel cycle. The use of burnable poisons reduces the requirement for soluble boron, thus reducing the production of tritium in the primary coolant.

In UK HPR1000, enriched boric (boron-10) is utilised; therefore there is fewer boron-11 in the primary coolant. Despite that the use of enriched boron does not reduce the total amount of boron-10 and tritium it produces, it does reduce the total amount of boron required for chemical shim purposes. So the production of the tritium is minimised.

In addition, the use of enriched boric acid also reduces the amount of lithium hydroxide required for pH control, thus the production of tritium is minimised.

3.4.1.3.3 Evidence 1c-3: Use of Lithium-7 Enriched Lithium Hydroxide

Lithium is injected into the primary coolant to adjust the pH of the coolant. It is injected in the form of lithium hydroxide. Lithium is contributor to tritium, and the generation reactions of tritium are listed as follows.

$$ {}^{6}_{3}Li + {}^{1}_{0}n \xrightarrow{(n,\alpha)} {}^{4}_{2}He + {}^{3}_{1}H \qquad (3.4.1\text{-}5) $$

$$ {}^{7}_{3}Li + {}^{1}_{0}n \xrightarrow{(n,n\alpha)} {}^{4}_{2}He + {}^{1}_{0}n + {}^{3}_{1}H \qquad (3.4.1\text{-}6) $$

Natural lithium contains approximately 7.5% of lithium-6, the remainder being lithium-7. Compared to lithium-7, lithium-6 has a much higher neutron absorption cross-section, so it is a greater contributor to the production of tritium. To minimise the production of tritium, lithium-7 enriched (or depleted lithium-6) lithium hydroxide is applied in the UK HPR1000. More details about lithium refer to Evidence 1d-1 (Evidence 1d-1: Application of ^{7}LiOH).

3.4.1.3.4 Evidence 1c-4: Optimisation of Use of Secondary Neutron Sources

During loading fuel assemblies into core and reactor start-up, the neutron flux in the core may be so low that it is difficult to measure the neutron flux accurately for the neutron ex-core detector. Neutron source assemblies are used to increase the amount of neutron in the core at the start-up stage, it helps operator to monitor the state of core, and then it can ensure criticality safety during the refuelling and start-up stage.

In UK HPR1000, the effective material in secondary neutron source assemblies is mainly made up of antimony-beryllium mixture. Secondary neutron source assemblies are loaded in the first reactor cycle to produce enough activated material and also used in succeeding cycles to provide a neutron source for start-ups. However, beryllium is an important source of tritium under neutron radiation, and the generation reactions are as below (3.4.1-7, 3.4.1-8, and 3.4.1-9).

$$ {}^{9}_{4}Be + {}^{1}_{0}n \xrightarrow{(n,\alpha)} {}^{4}_{2}He + {}^{6}_{2}He \qquad (3.4.1\text{-}7) $$

$$ {}^{6}_{2}He \xrightarrow{\beta^-} {}^{6}_{3}Li + \beta^- \qquad (3.4.1\text{-}8) $$

$$ {}^{6}_{3}Li + {}^{1}_{0}n \xrightarrow{(n,\alpha)} {}^{4}_{2}He + {}^{3}_{1}H \qquad (3.4.1\text{-}9) $$

A proportion of the tritium can diffuse through the stainless steel material which constitute the secondary neutron source rod cladding and eventually be released to the primary coolant.

In order to reduce tritium diffused from secondary neutron sources, one potential way

is to replace the stainless steel cladding with zircaloy since the diffusion rate of tritium from zircaloy is significantly lower than that of stainless steel, Reference [27], However, the life-time of zircaloy is much shorter owing to irradiation effect and corrosion behaviour. As a consequence, much more solid radioactive waste will be produced if zircaloy is used as cladding material and replaced frequently. In addition, zircaloy is significantly more expensive than stainless steel cladding. Therefore, stainless steel cladding for the antimony-beryllium neutron source rods are used in the current design of UK HPR1000.

Another way to minimise the production of tritium is to reduce or abandon the use of antimony-beryllium. However, the risk of insufficient neutron counts for ex-core detector may exist if secondary neutron sources are abandoned.

3.4.1.4 Argument 1d: Minimise the Radioactivity of Waste by Optimising the Water Chemistry in the Primary Coolant

The primary circuit water chemistry has a significant role in radiological protection, the efficient and safe operation of the plant, equipment protection and the generation of radioactive waste. The prospective water chemistry regime for the UK HPR1000 is based on the water chemistry of the reference design (HPR1000 (FCG3)). The primary objective of the water chemistry is to maintain the safe operation and structural integrity of the plant. In addition to this primary objective the following important attributes are also taken into account when developing the water chemistry regime:

a) Minimise the generation of corrosion products;

b) Minimise the generation of activation products;

c) Minimise maintenance waste associated with SCC; and

d) Minimise the use of additives that adversely impact the generation, management or disposal of radioactive waste.

To achieve these objectives, the primary coolant chemistry regime of the UK HPR1000 takes the following measures into account:

a) Application of ^{7}LiOH as the pH control reagent to reduce the generation of tritium and corrosion products (Evidence 1d-1: Application of ^{7}LiOH);

b) Hydrogen dosing to prevent SCC caused by oxygen entrained in the primary coolant, and reduce the ex-core radiation field that results from stability and solubility of oxygen corrosion products (Evidence 1d-2: Hydrogen Dosing);

c) Impurity control to reduce corrosion and scaling of fuel cladding (Evidence 1e-3: Control of Impurities);

d) Explore options to further optimise the water chemistry regime. For example an

assessment to determine if zinc injection should be added to the UK HPR1000 water chemistry regime is on-going (Evidence 1d-4: Development of the Chemistry Regime).

The chemistry regimes used in the UK HPR1000 are presented in T-3.4-2.

T-3.4-2 Chemical Characteristics of the Primary Circuit

No.	Chemistry Addition	Form	Primary Function
1	Lithium hydroxide	Liquid	pH control (balance addition of boric acid)
2	Hydrogen	Gaseous	Radiolysis control
3	Zinc (proposed as an option for the UK HPR1000)	Liquid	Corrosion control

A number of topic reports are being produced that will demonstrate how BAT and other key attributes including ALARP are being considered during the development of the water chemistry regime for the UK HPR1000. The assessment will explore the balance between minimising dose to workers, the formation of operational and decommissioning radioactive wastes, discharges to the environment, safety of the plant, costs and other hazards.

3.4.1.4.1 Evidence 1d-1: Application of ^{7}LiOH

Lithium hydroxide (^{7}LiOH) is used to compensate for the acidity of boric acid and control the pH of the primary circuit in the UK HPR1000. The concentration of lithium-7 in the RCP [RCS] varies according to a pH control curve as a function of the boric acid concentration in the reactor coolant.

The use of enriched boric acid allows the level of ^{7}LiOH needed to maintain higher pH_T at the beginning of the cycle, as well as a constant pH_T throughout the cycle. Optimising pH_T in the primary circuit will:

a) Minimise the corrosion of structural materials; and

b) Minimise the transport of corrosion products to the reactor core.

As a result, the corrosion products that have the potential to be activated by neutron flux and will subsequently require management and disposal as radioactive waste are reduced. Control of the pH also maintains the integrity of the fuel cladding material, reducing the potential for fuel failures and hence fission product release. Use of lithium-7 rather than lithium-6 reduces the generation of tritium (lithium-6 produces

greater quantities of tritium than lithium-7).

^{7}LiOH is selected for its compatibility with boric acid and with stainless steel and zirconium. In addition, lithium-7 is produced in the core region because of irradiation of the dissolved boron in the coolant.

3.4.1.4.2 Evidence 1d-2: Hydrogen Dosing

Radiolysis of the coolant will produce oxygen which contributes to SCC of stainless steel. Oxygen production is suppressed by adding hydrogen and maintaining the hydrogen concentration at an optimal level. This will maintain the electrochemical potential at a sufficiently low level to prevent the SCC of stainless steel during power operations. In addition, make-up water that is added to the primary circuit will be degassed to keep oxygen levels within specified limits.

The hydrogen concentration specification for the UK HPR1000 has been determined based on the following aspects:

a) Material integrity. Potential for material corrosion of the primary circuit and its associated Structures, Systems and Components (SSC) in the presence of oxygen;

b) Safety. Hydrogen degassing in vessels leading to a potential explosive H_2/O_2 mixture;

c) Radiation field management. The influence of hydrogen on the redox potential of the primary coolant and consequently on corrosion product solubility; and

d) Plant operational availability. The requirement to optimise hydrogen elimination during shutdown in order to meet the requirements necessary to proceed to forced oxygenation of the primary coolant (to avoid H_2/O_2 explosive risks).

Due to the action of hydrogen on the stability and the solubility of corrosion products, it also has an influence on the contamination of out-of-core surfaces. The hydrogen concentration is based on the solubility control of nickel and ferrites.

3.4.1.4.3 Evidence 1d-3: Control of Impurities

Impurities will be controlled to reduce local corrosion of structural materials and the scaling of fuel cladding. For example, impurities such as chlorides, fluorides, and sulphates can cause corrosion of the primary system components and low solubility species such as calcium compounds, magnesium compounds, aluminium compounds and silicon dioxide can deposit on fuel surfaces.

The impurity level of the primary coolant makeup water is maintained by the nuclear island demineralised water treatment system, which is described in Reference [29].

In order to maintain low levels of impurities in the primary circuit, auxiliary circuits (such as the TEP [CSTS]) and the Reactor Boron and Water Makeup System (REA [RBWMS]) boric acid make up tanks the coolant must be purified at optimum

conditions through the use of demineralisers and filters. The purification function is maintained by:

a) The RCV [CVCS] purification station at a nominal flow rate during power operation; and

b) The TEP [CSTS] purification station.

3.4.1.4.4 Evidence 1d-4: Development of the Chemistry Regime

To ensure that BAT has been applied to the design of the water chemistry regime, the reference design (HPR1000 (FCG3)) chemistry regime will be subject to further assessment. For example, zinc injection in the primary circuit, which has progressively been adopted in operational PWR's, will be considered as it can contribute to:

a) Reduced radiation field dose rates; and

b) A reduction in primary water SCC in nickel alloys.

Zinc incorporation blocks cobalt incorporation into corrosion fields reducing radiation field dose rates.

3.4.1.5 Argument 1e: Minimise Activated Corrosion Products through Material Selection

Structure and component materials in the reactor are exposed to neutrons generated by nuclear fission. This process produces 'activation products' which are a significant source of direct doses and radioactive waste. Minimising activation results in a reduction of the radioactivity of reactor structures and components and of primary coolant and subsequently, radioactive waste.

There are two main sources of activation products:

a) Structure and component materials. As they are near to nuclear fuel and the associated neutron flux, they are easily activated and become radioactive waste during maintenance and decommissioning;

b) Corrosion products. They are generated and suspended in the primary coolant and become activated as they pass through the reactor core. The activated corrosion products can then be distributed to other parts of the reactor and the primary circuit. Alternatively they will be captured on the waste treatment systems and become solid radioactive waste that will be ultimately disposed of, or be discharged to the environment.

Material selection of the UK HPR1000 takes account of decades of experience in the design, operation and decommissioning of relevant PWRs which mainly include CPR1000 (China), Taishan Project (China) and other worldwide PWRs. Experience gained from using corrosion-resistant steels in progressive evolutions of historical

PWRs has been used to select materials of construction for the UK HPR1000. This will contribute to minimising both the generation of corrosion products and the susceptibility of such corrosion products to activation.

The choice of materials in the UK HPR1000 is adapted to the intended conditions which include in particular the applied loading (i.e. amplitude and potential cyclic variations), operating temperature and environmental conditions which may impact the ageing of the components, including the evolution of the physical properties of materials and various types of corrosion.

Consequently, in the UK HPR1000, two measures are considered to minimise activated corrosion products through material selection. One measure is to minimise or substitute activated elements in structure and component materials (Evidence 1e-1: Minimise or Substitute Activated Elements in Structure and Component Materials), the other measure is to minimise the corrosion products by using excellent corrosion-resistant materials (Evidence 1e-2: Minimise the Corrosion Products by Using Corrosion-Resistant Materials).

Detailed information to further substantiate the evidence presented to support this argument will be developed as GDA progresses. This information will be included in equipment specifications and material specifications for the UK HPR1000, which is consistent with those of the reference design (HPR1000 (FCG3)).

3.4.1.5.1 Evidence 1e-1: Minimise or Substitute Activated Elements in Structure and Component Materials

In the UK HPR1000, materials of structures and components in contact with the primary coolant include nickel based alloy, stainless steel and cobalt based alloy. Generally, all elements in these metals are evaluated from the activity minimisation point of view, and some elements are potentially activated and turn to high activity or long half-life radionuclides which have the potential to adversely impact the environment, according to the *'Radionuclide Selection Analysis Report'*, Reference [30]. These elements mainly are cobalt, silver, antimony and nickel.

During material selection, these elements are either strictly controlled, or are substituted by other materials which do not contain these elements.

<u>Cobalt element</u>

a) Cobalt content in metals

For materials in contact with the reactor coolant in the UK HPR1000， the specification for the cobalt content will be consistent with or stricter than the *Design and Construction Rules for Mechanical Equipment of PWR Nuclear Islands* (*RCC-M) codes,* Reference [31]. The cobalt content will also be no greater than that previously used in PWRs built by CGN and will be at least equivalent with other PWR plants being operated or constructed worldwide. For example, the cobalt content of stainless

steel is no more than 0.10% (no more than 0.20% in the RCC-M); the cobalt content of nickel based alloy is no more than 0.06% (no more than 0.10% in the RCC-M); the cobalt content of the Steam Generator (SG) tube is no more than 0.015% (no more than 0.018% in the RCC-M); the cobalt content of the Reactor Pressure Vessel (RPV) internals in the high neutron flux region is no more than 0.06% (no more than 0.10% in RCC-M).

b) Cobalt based alloys

Cobalt based alloy (e.g. Stellite®), is a type of cobalt-chromium-tungsten alloy designed for wear resistance, which displays outstanding hardness and corrosion resistance. However, in the UK HPR1000 the use of Stellite® is strictly limited and will only be used in a very few components where the required performance of these components cannot be satisfied if low or cobalt-free alloys are used. It is limited to applications where its hardness, low friction, and resistance to wear affect the components reliability in critical operations. Examples components that require cobalt based alloys include some critical parts of the Control Rod Drive Mechanisms (CRDM) and Reactor Vessel Internals (RVI), and some parts in valves.

1) CRDMs

A small number of components including latch pins, link pins, and locking buttons must be manufactured from cobalt based alloys because the functions cannot be achieved by using other substitute materials. The latches and latch links are made of austenitic stainless steel and cladded with cobalt based alloys to enhance abrasive resistance. The total surface area of cobalt based alloys is around { }m^2. Compared to the CPR1000 design, this value is slightly increased because of the difference of double-tooth latches of 68 CRDMs in the UK HPR1000 design and single-tooth latches of 61 CRDMs in the CPR1000 design. However, this value is better than the AP1000 design whose latches and latch links are cobalt based alloy casts.

2) RVI

Small amounts of cobalt based alloys (Stellite®) are used for hard-facing RVI components, such as upper core plate inserts, alignment plate, metal reflector inserts, radial key inserts and clevis inserts. The total surface area of cobalt based alloy is around { }m^2, which is an improvement compared with the previous CPR1000 projects and Taishan project (China), details shown in T-3.4-3.

T-3.4-3 Total Surface Area of Cobalt Based Alloys in Different Projects

{ }

{ }

3) Valves

The sealing surface is an important part of the valve to ensure leak tightness. In order to enhance leak tightness of the valve during operations, the cobalt based alloys (e.g. Stellite®) are usually overlaid onto the sealing surface of the valve to resist wear and corrosion even under high temperature environments. The cobalt based alloys also provide wear resistance on sealing surfaces to reduce the risk of fracture under large impact load.

However, the joint action of wear, erosion, corrosion and maintenance can result in particle dissociated from the cobalt based alloys sealing surface enabling it to be carried into the reactor core, where the particle is activated.

Based on current industry technology, feedbacks from some potential valve vendors demonstrate that cobalt free alloys can be applied to the valve sealing surface in NPPs. In the reference design (HPR1000 (FCG3)), cobalt free alloys have been specified for valve sealing surfaces which directly contact with the reactor coolant. Based on this experience the same approach is intended to be specified in the UK HPR1000. Given the variation in technology and experience and the associated uncertainties between different valve suppliers and different valve operating conditions, a further investigation will be carried on the application of cobalt free alloys and cobalt based alloys in valve sealing surfaces.

Silver element

In the primary circuit and connected systems, silver is only incorporated in the RPV seal gasket, and a small amount of seal gaskets made by silver are also used in nuclear auxiliary systems, such as the seal gasket coated with silver in the Letdown heat exchanger in the RCV [CVCS].

Within the reactor, the absorber rods of the Rod Cluster Control Assemblies (RCCAs) are made of Silver-Indium-Cadmium alloy, which contain 80% silver. The absorber rods are physically separated from primary coolant by cladding material. These design characteristics of the RCCAs are widely applied in PWRs across the world. Detailed information is described in *PCSR Chapter5 sub-chapter 5.4.2.2 Rod Cluster Control Assembly*, Reference [32].

Antimony element

In the UK HPR1000, antimony is not used for any component within the primary circuit. Antimony is strictly controlled in primary circuit materials as a residual element.

Nickel element

As nickel-63 has a long half-life of 100 years and does not emit high energy gamma rays, it is not only a concern for radiation protection, but also for environment discharges during normal operation and the radioactivity of radioactive waste during decommissioning.

The nickel element is a vital composition of nickel based alloy and stainless steel used in primary circuit components or for cladding of the low alloy steels in contact with primary coolant. It is not possible to replace nickel with an alternative for nickel based alloys and stainless steel used in the UK HPR1000. However, its release rate (corrosion rate) is controlled to a very low level by the combination of its excellent corrosion-resistant characteristics, surface finishing and water chemistry in order to minimise the generation of activated corrosion products.

3.4.1.5.2 Evidence 1e-2: Minimise the Corrosion Products by Using Corrosion-Resistant Materials

The main materials of the primary circuit of the UK HPR1000 reactor are Alloy 690 and austenitic stainless steel which have excellent corrosion resistance to primary coolant. Moreover, machining is used for surface finishing to achieve a very low surface roughness (no more than 6.3μm). This is beneficial to decrease corrosion rates and to subsequently minimise the production of corrosion products.

a) Nickel based alloy

The SG tube in the UK HPR1000 is made of a nickel based alloy (Alloy 690 Thermally Treated). This is the most significant source of corrosion products as it has a large surface area in contact with primary coolant. The corrosion products contain elements such nickel and cobalt which may be activated if they pass through the reactor core with the primary coolant. In earlier PWRs, Alloy 600 was used but was more susceptible to SCC. Alloy 690 was introduced for SG tubes as it provided superior resistance to SCC and contains less nickel content. Moreover, the Thermally Treated treatment used in the design of the UK HPR1000 is better than Mill-Annealed treatment in terms of its resistance to SCC. Also, during the manufacturing of SG tubes, the surface of the tubes are polished, which contributes to reducing the release rate of corrosion products from the SG tubes.

At present, Alloy 690 and Alloy 800 are the two materials used most widely for SG heat transfer tubes around the world. Alloy 690 is the preferred material for SG heat transfer tubes in NPPs built in China, the United States and France. Alloy 800 is preferred in NPP's built in Canada and Germany.

In the UK HPR1000 design, the reasons for selecting Alloy 690 alloys for SG heat transfer tubes are mainly include:

1) Alloy 690 has good resistance to primary and secondary circuit corrosion

which is required to meet the material selection requirements of the SG in the UK HPR1000;

2) The UK HPR1000 designers are more familiar with the performance of Alloy 690 than Alloy 800, and have considerable experience in the application of Alloy 690 used in SG heat transfer tubes from previous CPR1000 plants; and

3) Except for NNPs in China, many NNPs around world, such as in the United States and France, have been using or had used Alloy 690 in SG heat transfer tubes. The operation feedback of SG tubes demonstrates that alloy 690 has good corrosion resistance to SCC.

b) Stainless steel

Owing to corrosion resistance and facilitation of machining working, stainless steel is selected for most primary components or for cladding of the low alloy steels used in areas in contact with primary coolant in the UK HPR1000. The selected stainless steels (parent metal: Z2CN18-10 and Z2CND18-12; weld metal for cladding: 308L) are chosen from RCC-M codes, and their carbon content is very low (no more than 0.035%). These stainless steels exhibit excellent resistance to inter-granular corrosion and SCC. However, corrosion products are generated from stainless steel in primary circuit components. The generation of corrosion products can be controlled not only by selecting high quality stainless steels but also by optimising the water chemistry regime in the primary coolant (Argument 1d: Minimise the Radioactivity of Waste by Optimising Water Chemistry in the Primary Coolant) and optimising the surface finish.

3.4.1.6 Argument 1f: Minimise Carbon-14 Production

Carbon-14, which has a long half-life of 5,730 years, is created in the primary circuit, predominantly by neutron activation of oxygen-17 and nitrogen-14, Reference [33]. Table T-3.4-4 presents the main nuclear reactions that produce carbon-14. The production of carbon-14 from the activation of carbon-13 is negligible due to low concentrations of carbon-13 in the primary circuit and the small reaction cross section. Carbon-14 is important to the demonstration of BAT for the UK HPR1000 because the dose assessment presented in PCER Chapter 7 states that it makes the biggest contribution to public dose.

T-3.4-4 The Nuclear Reactions for Carbon-14 Production

Reaction	Target Abundance (%)	Cross Section[1] (mb)	Target Concentration[2]
O-17(n, α)C-14	0.038	240	1.27E+22 atoms O-17/kg H_2O
N-14 (n, p)C-14	99.63	1800	4.28E+19 atoms N-14/kg H_2O – ppm N
C-13 (n, γ)C-14	1.07	0.9	5.36E+17 atoms C-13/kg H_2O – ppm C

Note:

1: Reference [34];

2: Reference [35].

The rate at which carbon-14 will be produced in the primary circuit will be proportional to the neutron flux and the concentration of oxygen-17 and nitrogen-14. The dominant mechanism for producing carbon-14 is the oxygen reaction O-17(n,α)C-14. This is because of the natural abundance of oxygen-17 in the coolant which is usually considered to remain constant.

Nitrogen has been selected instead of hydrogen as the purge gas in the reference design for the UK HPR1000. The use of nitrogen reduces the risk of internal explosions associated with hydrogen. A BAT assessment will be undertaken to demonstrate the application of BAT to the selection of purge gas in order to demonstrate that generation of carbon-14 has been minimised.

Nitrogen is used to control the pressure in systems such as the RCV [CVCS] and the REA [RBWMS] where it comes into contact with and dissolves into the primary coolant. Nitrogen will also be present in the hydrated hydrazine used for oxygen scavenging during start up and air dissolved in water returned from the Spent Fuel Pool (SFP) prior to start-up. However, the concentration of dissolved nitrogen in the primary circuit during power operation in UK HPR1000 will be very low (less than 10 ppm). This means that activation of nitrogen will not be the main source of carbon-14. (Evidence 1f-1: Control of Nitrogen-14 Concentration in the Primary Coolant).

3.4.1.6.1 Evidence 1f-1: Control of Nitrogen-14 Concentration in the Primary Coolant

Nitrogen-14 is the main isotope of nitrogen that contributes to the formation of carbon-14 and comprises 99.6% of the nitrogen present in air. The main sources of nitrogen in the primary coolant include:

a) Hydrated hydrazine (N_2H_4)

Hydrated hydrazine will be injected into the primary coolant during start-up. The function of hydrazine is to consume dissolved oxygen which will accelerate the corrosion of material in the primary coolant.

$$N_2H_4 + O_2 \rightarrow 2H_2O + N_2 \qquad (3.4.1\text{-}10)$$

b) Dissolving of nitrogen in air into water

The nitrogen can dissolve into the water of spent fuel pools especially during outage. The dissolved nitrogen will enter the primary coolant during start-up.

c) Dissolving nitrogen of tanks

The nitrogen cover provided to control the pressure of volume control tank will

gradually dissolve into the liquid phase. The dissolved nitrogen will then enter the primary coolant when the water is fed into the primary circuit.

Nitrogen is considered to be an impurity in the primary circuit and its concentration is maintained at very low level (less than 10 ppm) during normal operation.

3.4.2 Claim 2: Minimise the Radioactivity of Gaseous and Aqueous Radioactive Wastes Discharged into the Environment

Arguments presented in Claim 1 demonstrate that the production of radioactive waste has been prevented and minimised. However, the safe operation of the UK HPR1000 will result in the unavoidable generation of gaseous and aqueous radioactive waste. Engineered and management controls are therefore required to remove radioactivity from gaseous and aqueous wastes that will be discharged into the environment. It is recognised that the effectiveness and cost efficiency of abatement systems that remove radioactivity from gaseous and aqueous wastes must be balanced with the volume of solid radioactive waste that is created as a result of this treatment.

The Arguments presented in this Claim collectively demonstrate that the design and operation of the UK HPR1000 have been optimised in accordance with the following P&ID requirement, Reference [2]:

- *Minimising (in terms of radioactivity) discharges of gaseous and aqueous radioactive wastes.*

The Arguments and Evidence presented within this Claim have been structured to allow a Future Operator to review, assess and if applicable adopt them as part of the demonstration of compliance with the following requirement of the EA's guidance on environmental permits, Reference [3]:

- *2.3.2 The operator shall use the best available techniques in respect of the disposal of radioactive waste pursuant to the permit to:*

  (a) minimise the activity of gaseous and aqueous radioactive waste disposed of by discharge to the environment;

In developing the Arguments presented to demonstrate the validity of Claim 2, the following *Radioactive Substances Regulation - Environmental Principles*, Reference [15], are considered to be relevant and have been taken into account:

- *Principle ENDP14 'Best available techniques should be used for the control and measurement of plant parameters and releases to the environment, and for assessing the effects of such releases in the environment.'*
- *Principle ENDP15 'Best available techniques should be used to prevent and/or minimise releases of radioactive substances to the environment, either under routine or accident conditions.'*

- *Principle ENDP16 'Best available techniques should be used in the design of ventilation systems.'*

The Claim-Argument-Evidence structure for Claim 2 is presented in T-3.4-5.

T-3.4-5 Claim-Argument-Evidence Structure for Claim 2

3.4.2 Claim 2: Minimise the Radioactivity of Gaseous and Aqueous Radioactive Wastes Discharged into the Environment
3.4.2.1 Argument 2a: Minimise Leaks of Radioactive Process Fluids from Containment Systems
3.4.2.1.1 Evidence 2a-1: Optimise the Design of the Containment Systems
3.4.2.1.2 Evidence 2a-2: Primary Circuit Leak Monitoring
3.4.2.1.3 Evidence 2a-3: Monitoring and Terminating the Leakage from the Containment Systems to the Non-Containment Systems
3.4.2.1.4 Evidence 2a-4: Collection and Transportation of the Leakage
3.4.2.1.5 Evidence 2a-5: Containment Structure
3.4.2.1.6 Evidence 2a-6: Leak Tightness of the Containment
3.4.2.1.7 Evidence 2a-7: Leak Tightness in Spent Fuel Pool
3.4.2.1.8 Evidence 2a-8: The Fuel Pool Purification
3.4.2.1.9 Evidence 2a-9: Optimise System Configuration
3.4.2.2 Argument 2b: Minimise the Transfer of Radioactivity into the Secondary Circuit
3.4.2.2.1 Evidence 2b-1: Secondary Circuit Process Description
3.4.2.2.2 Evidence 2b-2: The Design, Manufacture and Management of Steam Generator
3.4.2.2.3 Evidence 2b-3: Secondary Circuit Water Chemistry

3.4.2.2.4 Evidence 2b-4: In-process Monitoring to Detect Steam Generators Leaks
3.4.2.2.5 Evidence 2b-5: Management of Potentially Gaseous and Aqueous Radioactive Waste Originating from the Secondary Circuit
3.4.2.3 Argument 2c: Minimise the Radioactivity of Gaseous Radioactive Waste Discharges by Optimising the HVAC System
3.4.2.3.1 Evidence 2c-1: Configuration of HVAC Systems
3.4.2.3.2 Evidence 2c-2: Use of HVAC Systems to Maintain a Negative Pressure
3.4.2.3.3 Evidence 2c-3: Provision of HEPA Filters and Iodine Adsorbers to Minimise the Radioactivity of Gaseous Radioactive Waste
3.4.2.3.4 Evidence 2c-4: Demonstration of Performance of HEPA Filters and Iodine Adsorbers
3.4.2.3.5 Evidence 2c-5: Air Flow Rate of HVAC System
3.4.2.4 Argument 2d: Minimise the Radioactivity of Gaseous Radioactive Waste Discharges by Optimising Gaseous Waste Treatment System
3.4.2.4.1 Evidence 2d-1: Description of the TEG [GWTS] Abatement Techniques
3.4.2.4.2 Evidence 2d-2: Selection of the Treatment Techniques for Noble Gases and Isotopes of Iodine
3.4.2.4.3 Evidence 2d-3: Sizing of Delay Beds to Support Abatement of Xenon, Krypton and Calculations to Support Abatement of Iodine
3.4.2.4.4 Evidence 2d-4: In-process Sampling and Monitoring to Support Demonstrating the Application of BAT
3.4.2.5 Argument 2e: Minimise the Radioactivity of Aqueous Discharges by Optimising the Liquid Radioactive Waste Management System
3.4.2.5.1 Evidence 2e-1: Configuration of the Liquid Radioactive Waste Management Systems
3.4.2.5.2 Evidence 2e-2: Management of Tritiated Distillate from the TEP [CSTS]

3.4.2.5.3 Evidence 2e-3: Design Policies for the Liquid Radioactive Waste Management System
3.4.2.5.4 Evidence 2e-4: In-process Sampling and Monitoring for Demonstrating Performance
3.4.2.6 Argument 2f: Minimise Discharge of Tritium
3.4.2.6.1 Evidence 2f-1: The Fuel Pool Cooling
3.4.2.6.2 Evidence 2f-2: Assessment of Alternative Options for Tritium Treatment
3.4.2.7 Argument 2g: Minimise Discharge of Carbon-14
3.4.2.7.1 Evidence 2g-1: Assessment of Alternative Options for Carbon-14

3.4.2.1 Argument 2a: Minimise Leaks of Radioactive Process Fluids from Containment Systems

The majority of the radioactivity that is generated in the reactor core is retained within the fuel (Claim 1). Some fission and activation products will be present in process fluids that are used in the primary circuit and associated systems. Any leaks of these process fluids will be collected and managed by dedicated systems prior to reuse or discharge to the environment. Process fluids will also enter the waste management systems when they are either no longer required or fail to meet process specifications.

The design of the UK HPR1000 includes features that maximise the service life of process fluids; prevent losses of process fluids through leakage; and convey process fluids that are either no longer required or that are from leaks to dedicated waste management systems. Those features that influence the demonstration of BAT are:

a) **Leak tightness of process equipment**

The UK HPR1000 employs universal design measures to provide reliable leak tightness which ensures that radioactive substances in the process systems are retained within the NPP. Where practicable, process systems are of welded construction and have double isolation. Equipment which performs safety functions such as valves, pumps and tanks are designed to enhance leak tightness. (Evidence 2a-1: Optimise the Design of Containment Systems).

b) **Leak detection systems**

Systems are included in the design of the UK HPR1000 which ensures that leaks of radioactive process fluids are promptly detected and responded to.

The RCP [RCS] is a very important pressure retaining boundary that aims to prevent the leakage of radioactive substances. A dedicated control and instrumentation system is provided to monitor the leak tightness of the pressure retaining boundary of the primary circuit (Evidence 2a-2: Primary Circuit Leak Monitoring).

Leaks in the heat exchanger that connect containment systems are a potential route for radioactive substances to spread from containment systems that contain radioactivity into non-containment systems that do not contain radioactivity. The leak tightness of heat exchangers is monitored in order to identify and terminate potential leaks. (Evidence 2a-3: Monitoring and Terminating the Leakage from the Containment Systems to the Non-Containment Systems).

In order to maintain the leak tightness of the SFP, the SFP consists of a concrete structure with a steel liner. The steel liner is the first barrier to prevent leaks, and the concrete structure provides secondary containment to prevent the spread of contamination. In the event of a leak in the steel liner, the leakage will flow into the gap (named the 'leak collection channel') between the steel liner and the concrete secondary containment. The leakage can be detected, collected for re-use or sent for treatment. The water level in the SFP is also continuously monitored to ensure that the water level in the SFP is maintained. Unexpected changes in the SFP water level would indicate a potential leak from the SFP. Design measures are provided to ensure that leaks can be managed (Evidence 2a-7: Leak Tightness in the Spent Fuel Pool).

c) **Systems to collect and convey leaks to the plant's waste management systems**

The design includes features such as double contained pipes, sumps, drains and ventilation systems to collect unavoidable leaks. The leaks will be separated, segregated, and either sent to be reused or passed to the waste management system (Evidence 2a-4: Collection and Transportation of the Leakage).

Containment structures such as the Reactor Building ensure that leaks are collected by engineered systems and prevent their release into the environment via routes that are not permitted (Evidence 2a-5: Containment Structure).

The design of penetrations includes monitoring and testing measures to demonstrate that the containment is leak tight (Evidence 2a-6: Leak Tightness of the Containment).

The leak tightness of Liquid Radioactive Waste Management System (LRWMS) tanks is further discussed in Argument 2e (Argument 2e: Minimise the Radioactivity of Aqueous Discharges by Optimising the Liquid Radioactive Waste Management System).

d) **Optimising the quantity of process fluids used in plant systems**

For the process systems that contain radioactive substance, once nuclear safety and environmental protection have been addressed, consideration is given to reducing the volume of radioactive fluids contained in process systems.

This consideration mainly aims to reduce the demand of venting, draining and flushing which may produce new radioactive fluids (induced by contamination); reduce the volume that is needed to be treated by the treatment systems; and reduce solid radioactive waste produced during plant maintenance or decommissioning (i.e. the number of valves, pumps, heat exchangers and pipes which convey the radioactive substances) (Claim 4 and Evidence 2a-9: Optimise System Configuration).

e) **Maintain the water quality in the pool where the spent fuel is located**

The water in the SFP is continuously circulated through chillers and purifiers which eliminates the requirement to transfer the water to the LRWMS. Treatment of the water using the fuel pool purification system minimises:

1) The radioactivity that is entrained in the fuel pool water; and
2) Minimises corrosion of the spent fuel that is stored in the spent fuel pool minimising the potential for leaks to occur during storage. (Evidence 2a-8: The Fuel Pool Purification).

Retaining radioactive fluids within process systems offers the following benefits:

a) Allows nuclides with a short half-life contained in process fluids to undergo radioactive decay during plant normal operation;

b) Allows radionuclides to be captured and filtered using processes included in the design;

c) Reduces the demand for new treated water, boric acid, fresh air, and nitrogen and their associated costs;

d) Reduces potential corrosion on the external surfaces of SSCs and the subsequent degradation of functional/safety performance; and

e) Reduces potential exposure of workers to radiation.

A disadvantage of maintaining leak tightness of the containment systems and providing systems to manage unavoidable leaks is an increase in the total amount of SSC's. These SSC's will require maintenance and inspection during the operational lifetime of the UK HPR1000 and will require management and disposal at decommissioning. These activities will result in an increase in the volume of solid radioactive waste that is produced (Claim 4).

It is demonstrated that measures have been included within the design of the UK HPR1000 to minimise leaks from containment systems. It is also demonstrated that unavoidable leaks will be managed to either allow reuse of process liquids or treatment and disposal via a permitted route. It is recognised that techniques provided to minimise leaks and to manage unavoidable leaks will result in the generation of an increased volume of solid radioactive waste. It is considered that the benefit, in terms

of minimising leaks outweigh the disadvantage, in terms of an increase in the volume of solid radioactive waste that will be generated and that this contributes to the application of BAT.

3.4.2.1.1 Evidence 2a-1: Optimise the Design of the Containment Systems

Codes and Standards

The nuclear industry specified codes and standards (References [31] and [36]) are selected and used widely in the nuclear process fluid systems. The codes and standards are mainly used in the following type of equipment (include but are not limit) that conveys the radioactive process fluid:

a) Tanks (e.g. volume control tank of RCV [CVCS]);

b) Pressure vessels (e.g. Reactor Pressure Vessel of RCP [RCS]);

c) Pumps (e.g. Safety Injection Pumps of Safety Injection System (RIS [SIS])); and

d) Valves (e.g. the isolation valves of pressure retain boundary).

More information is presented in References [37], [38], [39] and [40].

Process System Design

To enhance the leak tightness of the containment systems, welding is used as much as possible in the UK HPR1000. Flanged connections or suitable quick-disconnect fittings are used only where maintenance or operational requirements clearly indicate that these types of connection are preferable.

High reliability of isolation design is applied to containment systems. To meet good engineering practice, the use of double isolation is preferred in the containment systems to prevent the radioactive fluid being discharged to the waste treatment systems un-scheduled. This design measure is consistent with the requirement presented in Reference [41].

Hydraulic pressure tests will be used to confirm the leak tightness of the containment systems and its components. Three main kinds of hydraulic pressure tests are typically used:

a) Individual hydraulic pressure test for the components in factory after manufacturing;

b) Preliminary system hydraulic pressure tests during construction stage of the plant;

c) Periodic hydraulic pressure tests during the operation stage of the plant.

In addition to the pressure tests, information about leak tightness is also provided by the KRT [PRMS] in-process monitoring system. The KRT [PRMS] is designed to detect the radiological conditions in the plant and to alarm in the event that conditions

are outside of specified conditions, Reference [42]. The KRT [PRMS] measures the radioactivity of the process fluid (liquid and gas), the working area and the radioactive wastes.

The design features mentioned above for the process system design are presented in Reference [37], [38], [39] and [40].

Equipment design

The UK HPR1000 has a large amount of equipment including valves, pumps and tanks to perform various safety or operational functions (e.g. controlling, isolation). Consideration is given to enhance the leak tightness of these components. The design measures for the equipment mainly include:

a) Preference to use the bellow type seals which can eliminate external leakage from the valve, Reference [43], especially for valves which contains radioactive waste;

b) Preference to use the double packing seals where the bellow type seal is not available for the valve. When the pack seal is selected for the valves which contain radioactive waste, a leak-off line will be added to collect the potential leakage and connect to the RPE [VDS];

c) Remove of pneumatic valves in nuclear island containment systems which contain radioactive process fluid, especially for systems located in reactor building. This will minimise the potential leakage of gaseous radioactive waste which will need to be treated;

d) Preference to set the collecting line for the shaft seals of pumps which contain radioactive effluent in order to prevent the potential leakage discharging into the environment directly and to prevent further contamination. Isolation devices are also provided for the leak off line to prevent discharge based on the system operation condition;

e) Tanks or pools are been suitably sized. Generally, the minimum available volumes for the tanks or pools are defined based on the safety or operational function. Moreover, the maximum volumes are designed with a suitable margin considering both the margin for functional capability and to prevent overfilling which may result in the spreading of contamination and an unauthorised discharge.

The design features mentioned above for the process system are presented in Reference [37], [38], [39] and [40].

3.4.2.1.2 Evidence 2a-2: Primary Circuit Leak Monitoring

The function of the Leakage Monitoring System (KIL [LMS]) is to continuously monitor for unidentified leaks from equipment, e.g. Reactor coolant pumps, Steam generator and Pressuriser, the Main coolant line and the surge line. The KIL [LMS]

operates during normal shutdown with RIS-RHR mode (the RCP [RCS] average temperature is above 90°C) and reactor in power mode.

The coolant leak depressurises in the containment atmosphere and depending on the conditions will either be a water leak or a steam leak. The steam leak will be condensed by the air coolers, and will drain to the tank (RPE7101BA) via a dedicated line. The water leakage will be collected in a sump (RPE6101BA).

The function of the KIL [LMS] includes the detection of steam and water leaks. The technique for steam leakage detection include the temperature of containment atmosphere, the humidity and temperature of the interspace between the line and its insulation, the condensate flow rate from air coolers, and the level or flow rate to the tank. The method of water leakage detection is the level or flow to the sump.

According to guidance on monitoring and responding to RCP [RCS] leak, Reference [44], the KIL [LMS] is not classified as a safety system. The detector that monitors the level or flow rate to the sump will operate during seismic events that do not require plant shutdown. The diversity has been applied to steam leakage detection and the water leakage detection, e.g. the condensate flow, the level or flow rate to the tank and the level or flow to the sump.

There are two methods used for monitoring leakage and identifying its source. One is by monitoring the temperature of atmosphere near the equipment, the other is by monitoring the humidity and temperature of the interspace between the line and its insulation. For the first method, the leakage can be detected within 1 hour if the leakage rate is higher than 1 gal/min (1 gal/min ≈ 3.8 L/min ≈ 228 kg/h). For the second method, the leakage can be detected within 30 minutes if the leakage rate is higher than 0.5 gal/min.

There are two methods used for monitoring leakage and quantifying the flow rate. One is by monitoring the condensate flow rate from air coolers, the other is by monitoring the level or flow rate to the tank and sump. If the leakage rate is higher than 0.5 gallon per minute, the leakage can be detected within 1 hour for first method and can be detected within 2 hours for the second method (equivalent to 1 gal/min within 1 hour).

The measurement value of the detector is displayed in the main control room and the local KIL [LMS] cabinet, the alarm is displayed in the local KIL [LMS] cabinet. When the detector alarm is triggered, the KIL [LMS] cabinet will diagnose if the alarm is genuine. If the detector alarm is genuine, the diagnosed leakage alarm is triggered in the KIL [LMS] cabinet and displayed in the main control room. When the diagnosed leakage alarm is triggered, the operator will undertake loss of coolant inventory test in order to quantify the unidentified leakage and the total leakage.

If the leak rate exceeds specified limits, the operator will shut down the reactor.

3.4.2.1.3 Evidence 2a-3: Monitoring and Terminating the Leakage from the Containment Systems to the Non-Containment Systems

Various methods are used in UK HPR1000 to detect potential leakage from radioactive containment systems to non-containment systems via the heat exchangers. These methods include:

a) Pressure monitoring

The pressure sensors are set on the cold side of the heat exchangers (such as thermal barrier assembly of Reactor Coolant Pump, and the heat exchanger of RIS [SIS]).

The potential leak will result in an increase of pressure of the cooling water. This can be used to identify a potential leak, Reference [45].

b) Temperature monitoring

During normal operation, the cooling water that is returned to Component Cooling Water System (RRI [CCWS]) from the thermal barrier is designed not exceed operating limit in order to ensure the safety and operational functions performed by RRI [CCWS].

The temperature sensors are set on the cooling water collecting line of the heat exchanger. If the water temperature exceeds the limitation, the potential leak is then identified, Reference [45].

c) Flow rate monitoring

The flow rate sensors are set on the cooling water collecting line of the heat exchanger (e.g. the letdown heat exchangers of RCV [CVCS]). If the cooling water flow rate in the collecting line exceeds the normal operation limit, this will indicate a potential leak, Reference [46].

d) Radiation monitoring

Online monitors that are part of the KRT [PRMS] are provided to monitor leaks from systems containing radioactive substances to systems that should not contain radioactivity. It consists of:

1) Monitoring of nitrogen-16 and noble gas in the Main Steam System (VVP [MSS]) to detect leaks from the steam generators (Evidence 2b-4: In-process Monitoring to Detect Steam Generators Leaks);

2) Monitoring of radioactivity in the Steam Generator Blowdown System (APG [SGBS]) blowdown water via the sampling circuit to detect leaks from the steam generators (Evidence 2b-4: In-process Monitoring to Detect Steam Generators Leaks);

3) Monitoring of radioactivity in the Condensate Vacuum System (CVI [CVS])

to detect leaks from the steam generators (Evidence 2b-4: In-process Monitoring to Detect Steam Generators Leaks);

4) Monitoring of the radioactivity concentration of the RRI [CCWS] to detect the integrity of the containment systems (such as the integrity of the RIS [SIS] heat exchanger), Reference [47];

5) Monitoring of the ingress of radioactivity from the RCV [CVCS] letdown heat exchangers in the RRI [CCWS] system to detect the integrity of the containment systems, References [46].

If the operating parameters (such as pressure, temperature) exceed the normal operating limit, an alarm will be triggered to inform the operators. The set point is designed based on the normal operation and the normal operating transient (such as normal switch on or switch off of the pump).

After alarm is triggered, the isolation valves set on the cooling water line of the heat exchanger or the blowdown line of APG [SGBS] are designed to automatically or manually close in order to prevent further discharge of radioactive substances, References [45], [46], [47] and [48].

Detailed information relating to leak monitoring and control functions of the containment systems is described in References [37], [38], [39] and [40].

3.4.2.1.4 Evidence 2a-4: Collection and Transportation of the Leakage

The leakage from systems or components in the nuclear island building will be collected by the RPE [VDS] and sent to the Liquid Waste Treatment System (TEU [LWTS]) located in the Radioactive Waste Treatment Building (BWX) for treatment, Reference [49].

During collection and transportation, the following measures are taken to prevent leaks:

a) Detectable leaks will be transferred through a pipeline to the RPE [VDS] tanks located in the nuclear island building;

b) Undetectable leaks will be collected in the RPE [VDS] sumps via the floor drains in the building. Monitoring of the undetectable leaks will be via a change in the level of the liquid volume in the sumps. A sump pump is provided with a timeout operation alarm to indicate that the upstream water is abnormal;

c) The waterproof coating and leakage monitoring device are installed in the BGT, and the alarm will be triggered after the leak is detected.

3.4.2.1.5 Evidence 2a-5: Containment Structure

This section provides the evidence that demonstrates the leak tightness of the containment structure.

a) Description

The containment structure consists of internal containment, external containment and an annulus between these two containments.

The internal containment is a prestressed concrete structure, the inner surface of which is covered with a steel liner. It consists of a cylindrical wall, dome and ring belt which connects the cylindrical wall and dome. Two vertical ribs are located on the cylindrical wall symmetrically.

The external containment is located outside of the internal containment. It is a reinforced concrete structure composed of a cylindrical wall and dome. A passive water tank is located on the top of the cylindrical wall. The main function of the external containment is to prevent impacts from external hazards.

The annulus is set between the internal containment and external containment. Negative pressure is maintained in the annulus to collect possible leakage from the internal containment. Any leaks will be filtered prior to discharge via an authorised route.

A cross-section of the containment structure is shown is F-3.4-2.

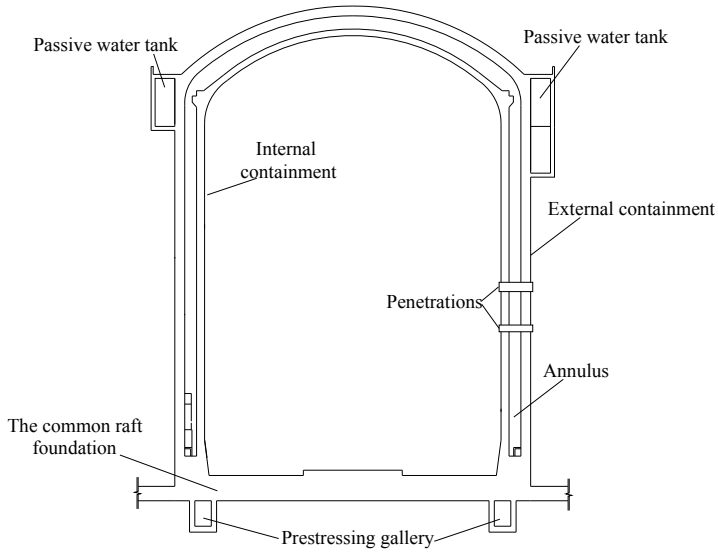

F-3.4-2 Section View of Containment Structure

b) Demonstration

Leak tightness of the containment structure is primarily delivered by the internal containment.

As described in the *PCSR Chapter 16 Civil Works & Structures*, Reference [50], the containment structure has been categorised as a class 1 safety structure and a class 1 seismic structure. The PCSR Chapter 16 also presents the Claims-Arguments-Evidence relating to the assessment of structural integrity during

accident conditions.

3.4.2.1.6 Evidence 2a-6: Leak Tightness of the Containment

The UK HPR1000 containment is a double-walled structure including an inner containment and an outer containment. The inner containment is a pre-stressed concrete structure with a steel liner, which prevents the leakage of radioactive substances. The leakage rate is minimised by the design of the containment and the related containment systems.

Design for Leak Prevention

Leaks from the inner space are prevented by the double-walled structure comprising concrete and the containment isolation systems (e.g. airlocks, equipment hatches and containment isolation valves on pipelines). Sufficient isolation systems are provided for containment penetrations to maintain leak tightness of the containment during plant operations.

The containment annulus, which is the space between the inner and outer containment, is maintained at a negative pressure by the Annulus Ventilation System (EDE [AVS]) to ensure that any contaminated air can be collected and filtered before being discharged to the atmosphere via the discharge stack.

Leakage from large-diameter penetration (e.g. airlock, equipment hatch, etc.) can be collected by the containment leak recovery sub-system which is part of the containment leak rate testing and monitoring system preventing the containment bypass even though the leak rate will be very small.

Monitoring of Leak Tightness Rate

The monitoring of containment leak is performed by the containment leak rate test. The leak rate is determined by measuring pressure, temperature and humidity in the containment.

Test for Containment Leak Rate

Before the operation of the plant, the containment undergoes a series of tests including a strength test and a leak rate test. The strength test will be performed under 0.483MPa g (115% of design pressure) to examine the structural strength of the containment. The leak rate test will be performed using the following methodology to ensure that the containment leak rate can meet safety requirements:

a) Overall leak rate test inside the containment (Category A) will be performed to determine the leak rate of the inner containment under ambient temperature. This test will be performed every ten years;

b) Category B tests will be performed to measure the leaks from special mechanical penetrations (personnel hatch, equipment hatch and transportation channel) and

electrical penetrations that have a double seal. This test will be performed periodically when in shutdown mode;

c) Category C tests will be performed to measure the fluid penetrations that are isolated by active isolation devices (valves). This test will be performed periodically when in shutdown mode.

Detail design information is presented in Reference [37], [38] and [50].

3.4.2.1.7 Evidence 2a-7: Leak Tightness in Spent Fuel Pool

The design of the reference design (HPR1000 (FCG3)) includes a seismically qualified, reinforced concrete spent fuel pool which is lined with stainless steel. This is the same design that is proposed for the UK HPR1000.

The design of the SFP steel liner will be undertaken during the detailed design stage. The water quality of the SFP is maintained through the operation of the Fuel Pool Cooling and Treatment System (PTR [FPCTS]) purification train, minimising the potential for corrosion related leaks.

During normal operating, the water level of SFP is monitored in order to ensure the safe operation of the plant. Various water level sensors are provided for the SFP, which display locally and in main control room or locally, Reference [51].

The techniques provided to detect and alarm in the event of a leak include:

a) When the water level unexpectedly decreases to the first low level, alarms will be triggered to inform the operator of a potential leak. The transfer tube between the internal storage compartment and the transfer compartment is isolated to prevent the potential leak in the Reactor Building, Reference [51];

b) When the water level decreases to the second low level, the isolation valves at the bottom of transfer compartment and cask loading pit are automatically isolated to prevent a potential leak downstream of the valves, Reference [51];

c) If the water level decreases continually due to a potential leakage in the cooling trains, the cooling trains are isolated automatically by closing the double isolation valves installed in the suction line, Reference [51].

These instruments are selected and sized based on both the functional requirements (including the safety functional requirements and the functional requirements for the normal operations) and the technical requirements for monitoring (e.g. capability to provide feedback to the instrument equipment vendor), Reference [51].

Several engineering principles have been defined for the UK HPR1000 to ensure that the plant will be operated safely. The arrangement of water level instruments is designed to provide high reliability by fulfilling these engineering principles, Reference [37].

Leak detector/collection channels are also provided in the space between concrete lines and major welds of the steel liner. Leakage through the liner can also be monitored by local visual inspection. This allows any leakage from the spent fuel pool's liner to be rapidly detected so that corrective maintenance can be implemented.

Leakage from these pools is collected by the floor drain line and is drained to RPE [VDS], from where it can be reused.

3.4.2.1.8 Evidence 2a-8: The Fuel Pool Purification

The fuel pool purification system is operated continuously. The purification unit is equipped with one upstream filter, one mixed bed demineraliser and one downstream filter to remove the corrosion products and fission products. The water quality of the treated SFP water is determined by analysing a sample collected from the sampling valve downstream of the purification unit.

The purification train is equipped with temperature, pressure and flow rate instruments to monitor the operation of the treatment systems. The PTR [FPCTS] purification train will maintain the water quality in the SFP within the specified water chemistry limits.

A detailed description of the fuel pool purification system is presented in References [37] and [51].

3.4.2.1.9 Evidence 2a-9: Optimise System Configuration

The volume of the Pressuriser has been sized to accommodate the expansion resulting from reactor coolant temperature changes associated with power modes from 0-100%, as well as plant start-up and shutdown. This means about 20m^3 of reactor coolant with high levels of radioactivity will be retained within the RCP [RCS] without discharge to the auxiliary systems or waste treatment systems during plant power operation.

The monitoring techniques for the reactor coolant average temperature has been optimised in the reference design (HPR1000 (FCG3)) and the UK HPR1000. Compared to previous techniques that have been used for temperature monitoring in the primary circuit, 39 manual valves have been eliminated in addition to the relevant piping systems.

The PTR [FPCTS] provides a purification function for the spent fuel pool as well as for the In-containment Refuelling Water Storage Tank (IRWST) and the Containment Heat Removal System (EHR [CHRS]). The water stored in the IRWST and the reactor pit flooding tank of the EHR [CHRS] is transferred to the purification sub-system of the PTR [FPCTS] then can be returned based on the demand for maintenance.

The transfer compartment of the PTR [FPCTS] is used to transfer fuel between the spent fuel pool and the RPV. The cask loading pit is used to package the fuel in preparation for removal to the intermediate storage facility. In the PTR [FPCTS]

design, the volume of the transfer compartment and the Cask loading pit is the same. The water is transferred between these pools based on the operation that is being carried out.

Detailed information related to the system configuration is presented in References [37], [38] and [39].

3.4.2.2 Argument 2b: Minimise the Transfer of Radioactivity into the Secondary Circuit

The steam generator is a circulation U-tube heat exchanger which serves to transfer the heat carried by the primary coolant to the secondary circuit in order to generate high quality steam. The steam is then transferred to the turbine generators where it is used to generate electricity. The tubes and tube plates of the steam generator form part of the reactor coolant pressure boundary (Evidence 2b-1: Secondary Circuit Process Description). During normal operations the tubes and tube plates prevent radioactivity entrained within the primary coolant from directly mixing with the secondary circuit water.

The UK HPR1000 has been designed to minimise the likelihood that under normal operations the working medium of the secondary circuit (steam and feedwater) will become radioactive. However, in the event of a leak from the primary circuit to the secondary circuit through the SG tubes and tube plates, radioactivity will migrate into the secondary circuit water. The secondary circuit has therefore been designed to allow the future operator to detect radioactivity that has entered the secondary circuit and to manage any associated radioactive wastes that are generated.

Minimising the spread of radioactivity into the secondary circuit will minimise the contamination of the following:

a) Secondary circuit water; and

b) Filters and resins used within the APG [SGBS].

The likelihood of a leak from the primary circuit to the secondary circuit has been minimised by:

a) Specifying materials of construction used to manufacture the SG that will be resistant to the environmental conditions that the SG will be exposed to. This includes the primary coolant and the secondary circuit water (Argument 1e: Minimise Activated Corrosion Products through Material Selection);

b) Optimising the water chemistry of both the primary coolant and the secondary circuit water to minimise the potential for corrosion (Evidence 2b-3: Secondary Circuit Water Chemistry);

c) Placing a requirement on the future operator to undertake inspections of the SG during commissioning and at regular intervals throughout its operational lifetime;

and

d) Designing the SG so that it is resistant to tube damage caused by mechanical or flow induced vibration (Evidence2b-2: The Design, Manufacture and Management of the Steam Generator).

Material selection is based on CGN's operational experience, taking into account CGN's experience of the compatibility of materials with the environmental conditions expected in both the primary and secondary circuits. Environmental conditions include chemical corrosion, stress corrosion and neutron irradiation. The In-Service Inspection (ISI) requirements are to be established to ensure effective inspection and maintenance of the SG during operation (Evidence 2b-2: The Design, Manufacture and Management of the Steam Generator).

The secondary circuit water chemistry includes:

a) addition of hydrazine for scavenging trace quantities of oxygen;

b) addition of ammonia for pH control; and

c) Minimisation of other contaminants present within the feedwater (feedwater purification).

Collectively the water chemistry aims to minimise the potential for SG tube corrosion (Evidence 2b-3: Secondary Circuit Water Chemistry).

Liquid waste will be generated from the secondary circuit during normal operation of the UK HPR1000. As shown in F-3A-9 (Liquid Radioactive Waste Management Systems Flow Sheet) blowdown water from the SG is held and monitored for both radioactivity and oil. If required local treatment is provided for the purposes of removing the oil. In the event that radioactivity is detected in the aqueous waste the future operator has the option to transfer the waste to the TEU [LWTS] for treatment (Evidence 2a-4: Collection and Transportation of the Leakage).

Four techniques are provided to enable the operator to detect radioactivity in the secondary circuit (Evidence 2b-4: In-process Monitoring to Detect Steam Generator Leaks). The four systems include:

a) **Monitoring of noble gases and nitrogen-16 in the Main Steam System VPP [MSS]**. A gamma-sensitive detector is provided to detect leaks. The detection of noble gases informs the operator that a leak has occurred. The detection of nitrogen-16 enables the operator to quantify the severity of a leak (the leak rate), identify smaller leaks, and to determine the severity of the leak;

b) **Monitoring of activity levels in the SG blowdown water via the sampling circuit**. A gamma-sensitive detector is located on the sampling lines to detect leaks; and

c) **Monitoring of activity levels of non-condensable gas extracted from the CVI [CVS]**. A gamma-sensitive detector is located outside of the CVI [CVS] discharge line that measures the activity level of non-condensable gas. This will inform the operator of any small increase in radioactivity in the secondary system.

The monitoring equipment has been designed to allow the operator to detect small leaks as well as accidents. The alarm thresholds set for 'medium' leaks have been set to identify significant leaks and a SG tube rupture. This is an accident condition and will result in the plant applying emergency operating procedures. Assessments relating to accident conditions are outside of the scope of PCER Chapter 3 and are provided within the PCSR. The alarm threshold for 'small' leaks has been set to notify the operator to investigate in accordance with the operating technical specification.

The measures described in this argument demonstrate that the likelihood of a leak of radioactivity from the primary circuit to the secondary circuit has been minimised. In the event that radioactivity is present within the secondary circuit techniques are included in the design to detect it and to enable the future operator to manage any radioactive wastes that are generated. Collectively these measures contribute to the application of BAT.

3.4.2.2.1 Evidence 2b-1: Secondary Circuit Process Description

The UK HPR1000 has three SGs, each of which connects to a common main steam header located in the turbine generator building via separate main steam lines.

A simplified diagram of the steam and water conversion system is presented in F-3A-1 in Appendix 3A.

As detailed in F-3A-1 in Appendix 3A, the main steam flow to the turbine high pressure cylinder, rotates the turbine in order to generate electricity. The exhaust steam from the high pressure cylinder is delivered to the moisture separator reheaters, and the reheated steam is fed into the low pressure cylinders. The turbine exhaust steam containing residual heat is then condensed in the seawater-cooled condenser back into the liquid phase. The Condensate Polishing System (ATE [CPS]) purifies the condensate to meet the secondary water chemistry specifications.

The condensate then passes through the Low Pressure Feedwater Heater System (ABP [LPFHS]) and the Feedwater Deaerator Tank and Gas Stripper System (ADG [FDTGSS]). The feedwater pressure is then increased by the Motor Driven Feedwater Pump System (APA [MFPS]), the feedwater is further heated by the High Pressure Feedwater Heater System (AHP [HPFHS]) before it is delivered to the inlet of the steam generator through the Main Feedwater Flow Control System (ARE [MFFCS]).

The APG [SGBS] helps maintain high quality secondary water chemistry quality under all plant operating conditions by purging concentrated impurities that have

accumulated in the SGs to the relevant temporary holding tank in preparation for monitoring and treatment.

3.4.2.2.2 Evidence 2b-2: The Design, Manufacture and Management of Steam Generator

The design principles applied to the SG are as follow:

a) Ensure the integrity of the pressure boundary during steady-state and transient conditions;

b) Provide a leak tight boundary between the reactor coolant and the SG secondary side;

c) Serve as the first mechanism for removal of heat from the reactor. This is applicable not only during power modes, but also during plant shutdown.

All pressure boundary materials used in the SG are selected and fabricated in accordance with the requirements of the applicable codes. Low alloy ferritic steel forgings (SA-508 Grade 3 Class 2) are selected for the main pressure boundary components, including the primary head, tube sheet, cylindrical shells, conical shell, upper elliptical head and major nozzles. Alloy 690 is selected for the tubes of the tube bundle. The tubing procurement specification incorporates best practice for achieving a very high quality tube material. The main pressure boundary components are forgings. The material surfaces in contact with the primary coolant are made of or clad with austenitic stainless steel or Nickel-Chromium-Iron Alloy. The ends of the inverted U-tubes are welded to the tube sheet cladding. The U-tubes are expanded inside the full depth of the tube sheet by using a hydraulic process.

A helium leak test is conducted to check the seal weld of each tube before pipe expansion. In the manufacturing shop, the primary side and secondary side of the SG surface is cleaned to remove any loose material.

ISI is a preventative maintenance process for the steam generator using non-destructive examination techniques and must be completed at regular intervals. The length of the interval must be conservative in order to guarantee early detection of any damage. The interval should be adjusted according to rates of equipment degradation.

3.4.2.2.3 Evidence 2b-3: Secondary Circuit Water Chemistry

The secondary circuit water chemistry plays a role in maintaining the integrity of the SG tubes and tube plates, which prevent radioactivity entrained in the primary circuit leaking into the secondary circuit.

The main objectives of the secondary circuit water chemistry are to avoid:

a) SG tube corrosion and heat transfer degradation; and

b) General corrosion and flow-accelerated corrosion in the secondary side systems.

The water chemistry is maintained by the chemical reagent injection system where the secondary circuit water is dosed with hydrazine for scavenging trace amounts of oxygen and ammonia for pH control. These treatments minimise chemical reactions that result in corrosion of the SG tubes and tube plates. The primary mechanism is to remove oxygen in the feedwater before it enters the SG.

Monitoring is also provided to detect the buildup of impurities within the secondary circuit water. Monitoring is provided for the following parameters: sodium, cation conductivity, chloride, sulphate, silica, iron and suspended solids. Impurities are removed by the APG [SGBS] and ATE [CPS] purification units.

Further information on the secondary circuit water chemistry is provided in Reference [29].

3.4.2.2.4 Evidence 2b-4: In-process Monitoring to Detect Steam Generators Leaks

To detect leaks from the primary circuit to the secondary circuit, the following four in-process radioactive monitoring techniques are provided by the KRT [PRMS], Reference [26]:

a) Noble gases in the main steam line of VVP [MSS];

b) Nitrogen-16 in the main steam line of VVP [MSS];

c) Radioactivity levels in the SG blowdown water via the sampling circuit; and

d) Radioactivity levels of non-condensable gas extracted from the CVI [CVS].

The first two types of monitoring are delivered by one item of measurement equipment. Gamma-sensitive detectors for both nitrogen-16 and noble gases are provided on each of the main steam lines. The monitoring of nitrogen-16 can quantify the leak rate whilst the monitoring of noble gases can only detect the presence of a leak.

Monitoring of the SG blowdown water is executed by a gamma-sensitive detector located on the sampling lines of the REN [NSS] which extract blowdown water continuously from the individual blowdown lines.

A gamma-sensitive detector located outside the discharge line of the CVI [CVS] measures the activity level of non-condensable gas and provides information about minor increases in the radioactivity of the secondary circuit water.

Alarms are provided for each of the four monitoring channels. Alarms are based on the severity of SG leak:

a) Monitoring of noble gas in VVP [MSS] steam and SG blowdown water detects medium leak and SG tube or tube plate rupture;

b) Monitoring of nitrogen-16 in VVP [MSS] steam detects small and medium SG leak; and

c) Monitoring of CVI [CVS] non-condensable gas detects medium SG leak.

The alarm threshold for small SG leak is set based on the operating technical specification limit. When this alarm threshold is exceeded, the operator is required to investigate the alarm and continue to observe changes in the radioactivity. Actions that the operator must perform are described as requirements in the operating technical specification.

The alarm threshold for medium leak associated with accident conditions is set to identify significant leaks or a SG tube rupture. When either of these two alarms is triggered, the plant will apply emergency operating procedures.

3.4.2.2.5 Evidence 2b-5: Management of Potentially Gaseous and Aqueous Radioactive Waste Originating from the Secondary Circuit

Aqueous and gaseous wastes are routinely produced from the secondary circuit during normal operation of the plant. Aqueous waste will also be discharged as a result of leaks from the pipeline or its associated equipment or during maintenance.

The aqueous waste that has the potential to be contaminated with radioactivity is collected and discharged to the liquid waste treatment stations. These comprise of the potentially radioactive oily waste water treatment station and conventional island waste liquid storage tank building.

The aqueous non-radioactive waste is collected and discharged to the waste liquid treatment station.

As shown in F-3.4-3 the aqueous waste is collected and treated according to whether it is contaminated with oil or radioactivity.

Gaseous wastes from the secondary circuit mainly originate from the condenser. These potentially radioactive gaseous wastes have the potential to contain entrained radioactivity. This gaseous waste is treated by High Efficiency Particulate Air (HEPA) filters (and iodine filters if needed) and then discharged into the environment.

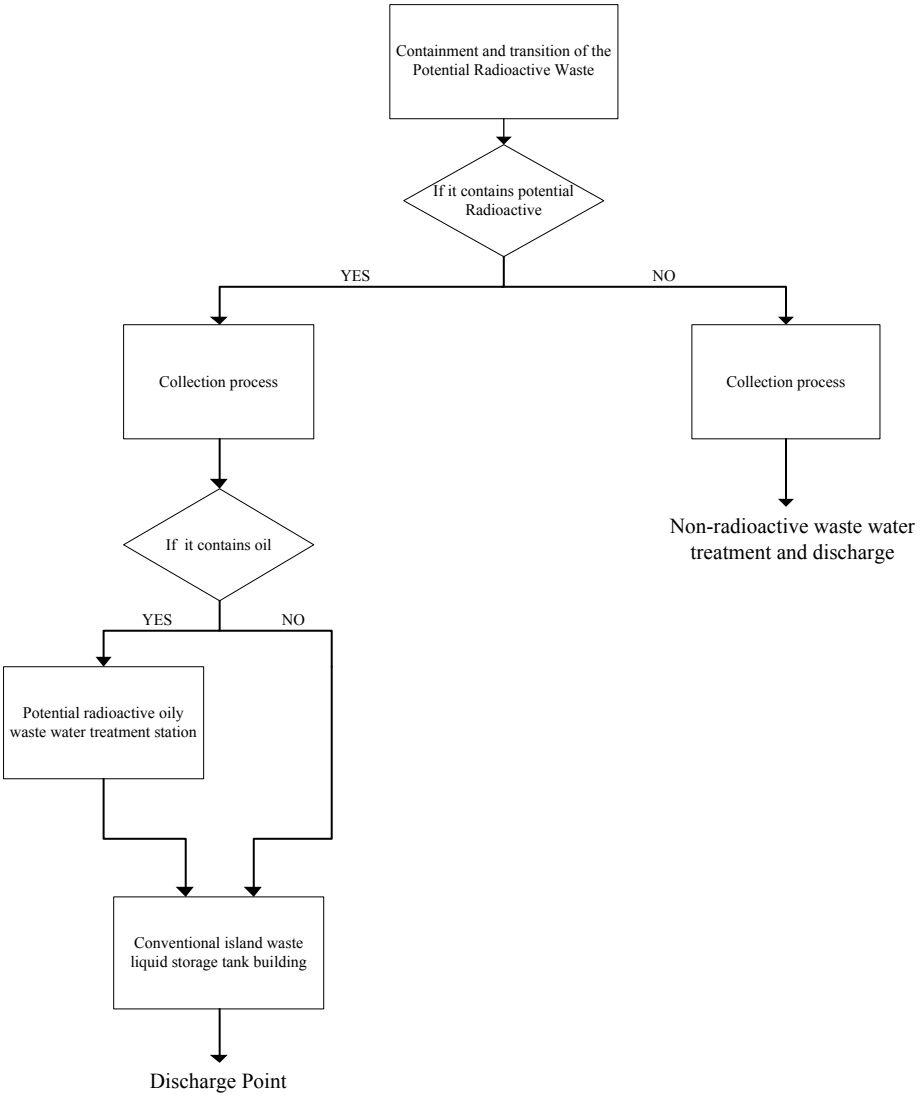

F-3.4-3 The Route of Containment and Transition of the Potential Radioactive Waste

3.4.2.3 Argument 2c: Minimise the Radioactivity of Gaseous Radioactive Waste Discharges by Optimising the HVAC System

During normal operations, air from areas with the potential to contain radioactivity is collected, conveyed, treated and discharged to the environment by the HVAC systems. Some of the air may contain low concentrations of radioactive aerosols (in the form of particulate, mists and vapours) and radioactive gases (including radioactive isotopes of iodine). HEPA filters and iodine adsorbers are provided in the HVAC system to reduce the amount of radioactive aerosols and radioactive gases that will be discharged to the environment.

The design and configuration of the HVAC systems will ensure that all extracted air that is collected from areas that have the potential to contain radioactive materials or radioactive waste is treated and discharged into the environment in a controlled way (Evidence 2c-1: Configuration of HVAC Systems).

The HVAC systems provided in each of the different buildings will maintain the buildings dynamic containment. Maintaining a negative pressure in the buildings can reduce the uncontrolled discharge of radioactive waste into the environment (Evidence 2c-2: Use of HVAC System to Maintain a Negative Pressure).

HEPA filters and iodine adsorbers are provided in the HVAC systems in order to reduce the concentration of radioactive aerosols and radioactive gases. HVAC systems that have iodine adsorbers that are not permanently inline will be brought into operation if the KRT [PRMS] system detects elevated concentrations of radioactivity (Evidence 2c-3: Provision of HEPA Filters and Iodine Adsorbers to Minimise the Radioactivity of Gaseous Radioactive Waste).

The performance of HEPA filters and iodine adsorbers, is determined using different measures including in-process monitoring (e.g. online differential pressure testing) and periodic tests. (Evidence 2c-4: Demonstration of Performance of HEPA Filters and Iodine Adsorbers).

Furth more, the design of HVAC systems air flow rate ensures the optimisation of discharges which is benefit for the reduction of solid radioactive waste (Evidence 2c-5: Air Flow Rate of HVAC Systems).

The features of the HVAC systems for the UK HPR1000 demonstrate that BAT is being applied to remove radioactive aerosols and radioactive gases.

3.4.2.3.1 Evidence 2c-1: Configuration of HVAC Systems

The HVAC systems are segregated according to the expected contamination levels and function of the buildings. All exhaust air from areas that have the potential to contain radioactive materials or radioactive waste is subject to abatement prior to being discharged into the environment through the discharge stack.

The main HVAC systems serving areas with potential contamination include the Nuclear Auxiliary Building (BNX), Fuel Building (BFX) (including fuel pool), reactor building, controlled areas of the safeguard building, controlled areas of the Personnel Access Building (BPX) and the waste treatment building. A description of each of the systems is provided in, Reference [52], and has been summarised below:

a) Nuclear Auxiliary Building Ventilation System (DWN [NABVS])

The DWN [NABVS] maintains the specified environmental conditions and a negative pressure within the BNX during plant normal operations. The DWN [NABVS] air supply subsystem provides conditioned and filtered fresh air to the BNX as well as the Fuel Building Ventilation System (DWK [FBVS]), Safeguard Building Controlled Area Ventilation System (DWL [SBCAVS]) and Containment Sweeping and Blowndown Ventilation System (EBA [CSBVS]). The exhaust subsystem has pre-filters and HEPA filters that operate continuously and a standby iodine adsorption exhaust subsystem. The iodine adsorption exhaust subsystem will be automatically

put into operation following the detection of high activity of iodine in the exhaust air by the KRT [PRMS] system.

b) DWK [FBVS]

The DWK [FBVS] maintains the specified environmental conditions and a negative pressure within the BFX. During normal operations, the exhaust air of the DWK [FBVS] is transferred to the discharge stack through the DWN [NABVS]. Under accident conditions, the exhaust air from the BFX automatically switches to the EBA [CSBVS] low-capacity subsystem and the exhaust air of the fuel pool hall to the DWL [SBCAVS] accidental exhaust sub-system.

c) EBA [CSBVS]

The EBA [CSBVS] includes a low-capacity subsystem and a high-capacity subsystem. During plant shutdown, the EBA [CSBVS] high-capacity subsystem will operate continuously. The exhaust air of the EBA [CSBVS] high-capacity subsystem is discharged to the discharge stack through the DWN [NABVS]. The low-capacity subsystem operates under accident conditions.

d) EDE [AVS]

The EDE [AVS]) includes one operational train that operates under normal operations and two safety trains that operate under accident conditions. The train that functions under normal operations is in continuous operation in order to maintain the negative pressure of the annulus. Exhaust air from the operational train is filtered by the pre-filters and HEPA filter before being discharged to the main stack. The safety trains only operate under accident conditions and as such are not discussed in PCER Chapter 3.

e) DWL [SBCAVS]

The DWL [SBCAVS] maintains the specified environmental conditions and a negative pressure within the controlled areas of the safeguard building. During normal operating conditions, the air of the DWL [SBCAVS] is extracted to the discharge stack through the DWN [NABVS]. Under accident conditions, the system switches automatically to the DWL [SBCAVS] accident exhaust subsystem.

f) Access Building Controlled Area Ventilation System (DWW [ABCAVS])

The DWW [ABCAVS] maintains the negative pressure within the BPX. The air from the DWW [ABCAVS] is extracted to the discharge stack via pre-filters and HEPA filters.

g) Waste Treatment Building Ventilation System (DWQ [WTBVS])

The DWQ [WTBVS] maintains the specified environmental conditions and a negative pressure within the waste treatment building. The extract subsystem which includes

pre-filters and HEPA filters operates continuously and the iodine-adsorption exhaust subsystem is maintained in standby. The iodine adsorption exhaust subsystem will operate automatically in the event that high activity of iodine in the air is detected by the KRT [PRMS] system.

A simplified diagram of each system is presented as figures F-3A-2 to F-3A-8 in Appendix 3A.

3.4.2.3.2 Evidence 2c-2: Use of HVAC System to Maintain a Negative Pressure

The HVAC systems that serve areas that have the potential to contain radioactive contamination maintain the environment below atmospheric pressure in order to control the spread of contamination into the external environment during normal operations.

The negative pressure of containment annulus is maintained by EDE [AVS] system.

The negative pressure of other building is maintained by corresponding ventilation systems. Details are provided in Evidence 2c-1 (Evidence 2c-1: Configuration of HVAC Systems).

There is also a pressure gradient between contaminated areas and adjacent zones to ensure that any movement of airborne radioactive material or waste is from areas that are likely to have lower contamination levels to areas that have the potential to contain higher levels of contamination.

3.4.2.3.3 Evidence 2c-3: Provision of HEPA Filters and Iodine Adsorbers to Minimise the Radioactivity of Gaseous Radioactive Waste

HVAC systems are fitted with HEPA filters and iodine adsorbers to abate radioactive aerosols entrained in air extracted from nuclear buildings. The configuration of each HVAC system is described in Evidence 2c-1 (Evidence 2c-1: Configuration of HVAC Systems).

HEPA filters are used to abate particulate matter that is entrained within HVAC systems. Deep-bed and rechargeable iodine adsorbers are included in those HVAC systems (Evidence 2c-1: Configuration of HVAC Systems) that have the potential to contain entrained iodine. These iodine filters are by-passed under normal operations. Iodine adsorbers are brought into operation to reduce radioactive iodine if the KRT [PRMS] system detects elevated concentrations of radioactivity. The efficiency of the HEPA filters and iodine adsorbers proposed for the UK HPR1000 are compliant with UK standards, Reference [53].

3.4.2.3.4 Evidence 2c-4: Demonstration of Performance of HEPA Filters and Iodine Adsorbers

In-process monitoring is carried out to ensure that the HEPA filters and iodine adsorbers are performing as expected. The HEPA filters are equipped with local

differential pressure measurement gauges (MPL) which indicate loading and the need to inspect and potentially replace the filters.

The HEPA filters and iodine adsorbers will be tested periodically in order to demonstrate their efficiency and to identify when the performance falls outside of the required specification. Performance testing will enable the future operator to determine when the filters and iodine absorbers need to be replaced.

As described in Evidence 2c-1 (Evidence 2c-1: Configuration of HVAC Systems), electrical heaters are used upstream of the iodine adsorbers to reduce the humidity of the gases entering the adsorbers. This is important to maintain the efficiency of the adsorbers. The pre-filters provided upstream of the HEPA filters are designed to increase the service life of the HEPA filters by collecting large size particulates.

The design, installation, operation and testing of filtration systems are compliant with UK including Reference [53].

Further detailed information about the design of the HVAC systems is provided in Reference [52].

3.4.2.3.5 Evidence 2c-5: Air Flow Rate of HVAC Systems

The air flow rate of controlled areas HVAC systems is minimised in order to reduce gaseous radioactive discharges into the atmosphere and the number of filters to be disposed of as radioactive waste.

The principles of air flow rate minimisation design are as follows:

a) Under the premise of satisfying the indoor conditions, the transfer air approach is a prior choice, then the air flow rate is reduced accordingly;

b) Local cooling unit is used in the area with large heat load, so that the air flow rate is reduced (refer to F-3A-3 and F-3A-6 in Appendix 3A);

c) The air flow rate of each HVAC system is detailed in Reference [52].

3.4.2.4 Argument 2d: Minimise the Radioactivity of Gaseous Radioactive Waste Discharges by Optimising Gaseous Waste Treatment System

Gaseous radioactive waste will unavoidably be generated during the operation of the UK HPR1000. Some of the radionuclides that have been generated as a result of nuclear fission and activation within the reactor core will be transferred from the primary coolant into the gaseous phase during degassing of tanks and vessels. These radionuclides will then be managed within the Gaseous Waste Treatment System (TEG [GWTS]) as process gaseous radioactive waste.

The radionuclides present in the primary gaseous radioactive waste are mainly radioactive noble gases, iodine isotopes, carbon-14, tritium, and a small amount of other radionuclides such as cobalt and caesium. The gaseous radioactive waste will be

both in gaseous and particulate form.

The TEG [GWTS] system is configured to collect and treat the process gaseous radioactive waste before it is discharged into the environment via the discharge stack (Evidence 2d-1: Description of the TEG [GWTS] Abatement Techniques).

The TEG [GWTS] comprises the following treatment techniques:

a) A recombiner that removes hydrogen from the process gaseous radioactive waste and combines it with oxygen to produce water. A secondary benefit of this technique to the transition of tritium in the gaseous phase into the liquid phase.

b) Heat exchanges to remove moisture from the process gaseous radioactive waste. Prevents moisture entering the delay beds which would adversely affect the delay beds performance.

c) Delay beds provided for the abatement of short half-life noble gases and isotopes of iodine.

d) HEPA filters in the DWN [NABVS] that will remove any entrained particulates from the TEG [GWTS] exhaust gases prior to discharge into the environment.

Two techniques are typically selected for the treatment of short half-life noble gases and iodine isotopes in light water reactors. These techniques are pressurised decay storage tanks and activated charcoal delay beds. Systematic technology optioneering work have been undertaken to support the selection of delay beds for the abatement of short half-life noble gases and iodine isotopes in the process gaseous radioactive waste generated in the UK HPR1000 (Evidence 2d-2: Selection of the Treatment Technique for Noble Gases and Isotopes of Iodine).

Design basis calculations has been undertaken to support the demonstration that the delay time for target radionuclides (short half-life noble gases and isotopes of iodine) and the volume of activated charcoal has been optimised (Evidence 2d-3: Sizing of Delay Beds to Support Abatement of Xenon and Krypton and Calculations to Support Abatement of Iodine). The calculations consider the process gaseous radioactive waste that will be generated as a result of normal operating conditions (start-up, shut-down and power).

The design basis calculations demonstrate that a delay time of 40 hours for krypton (except krypton-85) and 40 days for xenon is optimal. The design basis calculations demonstrate that further increasing the delay period would provide limited benefit in terms of dose reduction whilst requiring a grossly disproportionate volume of activated charcoal.

It is identified that isotopes of iodine have favourable characteristics that result in them being readily abated by activated charcoal. A technology assessment has also been undertaken (Evidence 2d-3: Sizing of Delay Beds to Support Abatement of

Xenon and Krypton and Calculations to Support Abatement of Iodine) to identify alternative abatement techniques for isotopes of iodine. The conclusion of this assessment was that activated charcoal delay beds are an appropriate abatement technique.

Carbon-14 and tritium will not undergo abatement prior to discharge from the UK HPR1000. However, the majority of tritium in the process gaseous radioactive waste will be transitioned into the aqueous phase by the hydrogen and oxygen recombiner and the heat exchangers. Whilst the tritium will still be discharged into the environment the majority of it will be in the aqueous radioactive waste. The total Dose Per Unit Release (DPUR) for tritium in liquids being discharged into the marine environment is lower than for tritium in gases being discharged into the atmosphere. For a generic site this is expected to reduce the impact of discharges of tritium on members of the public and the environment (Claim 3). The assessment of abatement techniques for tritium and carbon-14 is presented in Argument 2f (Argument 2f: Minimise Discharge of Tritium) and Argument 2g (Argument 2g: Minimise Discharge of Carbon-14).

The sampling and radiation detection provisions provided in the TEG [GWTS] and the stack sampling and monitoring on the discharge stack will enable the future operator to carry out in-process monitoring to confirm if the system is performing as expected (Evidence 2d-4: In-process Sampling and Monitoring to Support the Demonstration of Performance).

Sufficient evidence has been provided to demonstrate that the abatement of short half–life radionuclides and isotopes of iodine has been optimised. It has been demonstrated that the TEG [GWTS] contributes to minimising the impact from discharges of tritium that cannot be abated have been minimised by transferring them into the aqueous phase. Collectively these measures demonstrate that the TEG [GWTS] has been optimised and represents BAT.

3.4.2.4.1 Evidence 2d-1: Description of the TEG [GWTS] Abatement Techniques

The TEG [GWTS] system has the following operational functions:

a) Flush vessels and tanks containing reactor coolant with nitrogen to avoid hydrogen accumulation in the gas space and limit, through use of the recombiner, the hydrogen/oxygen concentration in the TEG [GWTS] system and its flushing components to below flammability limits;

b) Prevent radioactive gases escaping from the connected components into the building atmosphere by maintaining the flushing section at a slight negative pressure;

c) Delay the radioactive noble gases and isotopes of iodine in the process gaseous radioactive waste prior to discharge to the environment.

The main components that connect the TEG [GWTS] are the:

a) Pressuriser relief tank of the RCP [RCS];

b) Volume control tank of the RCV [CVCS];

c) Boric acid storage tanks of the REA [RBWMS];

d) Coolant storage tanks of the TEP [CSTS];

e) Boric acid column of the TEP [CSTS];

f) Degasifier column of the TEP [CSTS];

g) Condensate collecting tank of the TEP [CSTS];

h) Primary effluents drain tanks of the RPE [VDS] in the Reactor Buildings (BRX), Safeguard Buildings (BSX), BFX and the BNX; and

i) Sample backfeed vessel of the REN [NSS].

The main composition of the gases released from the reactor coolant to the TEG [GWTS] is mainly composed of hydrogen, oxygen, noble gases, isotopes of iodine, tritium and carbon-14.

The TEG [GWTS] connects the gas space of the vessels and tanks together and flushes them with nitrogen continuously to avoid hydrogen accumulation. The waste gas compressor keeps the flushing gas recirculating to draw out the hydrogen and radioactive gases released from the connected equipment into the TEG [GWTS]. The recombiner is used to recombine the hydrogen with oxygen to water. The flush gas can be reused in the closed circuit after recombination.

Because the gas space volume is typically in the steady-state operation, radioactive gases undergo decay in the flushing section and only a small volume of radioactive gas is discharged to the environment through the delay beds.

During the reactor shutdown and start-up transients, there is excess gas released to the TEG [GWTS]. This is the result of flushing the gas space of the RPV or the thermal expansion of the reactor coolant. This results in the release of process gaseous radioactive waste to the TEG [GWTS] for treatment. The activated charcoal delay beds provide adequate delay time for the target radionuclides (short half-life noble gases and isotopes of iodine). The delay results in a significant reduction in the radioactivity of the gases.

Downstream of the TEG [GWTS], the gases are routed to the DWN [NABVS], where it is filtered by HEPA filters and iodine traps if required. The treated gaseous radioactive waste is then discharged via the discharge stack.

Further details about the TEG [GWTS] are provided in *PCSR Chapter 23 Radioactive Waste Management, sub-chapter 23.7*, Reference [49].

3.4.2.4.2 Evidence 2d-2: Selection of the Treatment Techniques for Noble Gases and Isotopes of Iodine

The majority of the radionuclides to be treated by the TEG [GWTS] are noble gases (including krypton and xenon) and isotopes of iodine. Most of them have short half-lives (except for krypton-85) and undergo rapid decay. The radionuclides and their half-lives are shown in T-3.4-6.

T-3.4-6 Radionuclides and Their Half-lives to be Treated by TEG [GWTS]

Radionuclides	Half-life
Xe-133m	2.19d
Xe-133	5.25d
Xe-135	9.10h
Xe-138	14.1min
Kr-85m	4.48h
Kr-85	10.76a
Kr-87	76.3min
Kr-88	2.84h
I-131	8.04d
I-132	2.30h
I-133	20.8h
I-134	0.876h
I-135	6.61h

The two techniques for decay of gaseous short half-life radionuclides commonly used in light water reactors are described in T-3.4-7.

T-3.4-7 Decay Techniques for Short Half-life Radionuclides in Gaseous Effluent

Treatment Technique	Description
Pressurised Decay Tank Storage	The radioactive gaseous effluent is compressed by a compressor into one of several decay tanks. The gaseous wastes are stored in the decay tanks for sufficient time, so that the short half-life radionuclides can be decayed before being discharged. The pressurised decay tank storage technique is commonly used in CPR1000 and some French PWRs.
Activated Charcoal Delay Beds	The gaseous radioactive waste is passed through a series of activated charcoal delay beds where the short half-life

Treatment Technique	Description
	radionuclides are decayed by adsorption. To increase the adsorption efficiency of the activated charcoal, the moisture, temperature and flow rate are controlled and the pressure of the delay bed is increased to positive pressure. The activated charcoal delay beds are commonly used in light water reactors including: european pressurised water reactor, advanced boiling water reactor, advanced passive pressurised water reactor, KONVOI plant in Germany and Sizewell B (T-3.4-8).

Activated charcoal delay beds are extensively used in light water reactors around the world. The report issued by the Organisation for Economic Co-operation and Development (OECD) in 2003, Reference [54], identified that activated charcoal delay beds are appropriate for the decay of noble gases and states that they achieve an economically beneficial retention of radioactive noble gases. A technology optioneering report for the two technologies has been produced, in Reference [55]. It concludes that compared to pressurised decay tank storage, the activated charcoal delay bed technology has advantages in reducing the radioactive safety risk and first construction cost, etc. And in operability and maintainability, specific skills, resource use and lifecycle costs, the two options is equivalent. So the activated charcoal delay beds technology is selected in the TEG [GWTS] design in UK HPR1000.

T-3.4-8 List of NPPs Using Activated Charcoal Delay Beds

3.4.2.4.3 Evidence 2d-3: Sizing of Delay Beds to Support Abatement of Xenon, Krypton and Calculations to Support Abatement of Iodine

a) Sizing of Delay Beds to Support Abatement of Xenon and Krypton

The radioactivity of each individual radionuclide at a period in time can be calculated by its initial quantity of radioactivity and the delay constant which is shown in the following equation.

$$A(t) = A_0 \cdot e^{-\lambda t} \qquad (3.4.2\text{-}1)$$

With,

A(t): Quantity of radioactivity at time t, Bq;

A_0: Initial quantity of radioactivity, Bq;

λ: Decay constant, 1/s.

The reduction in radioactivity over time for each radionuclide has been calculated, Reference [56], and a decay curve showing the delay time versus the total radioactivity of krypton (except for krypton-85) and xenon is provided in T-3.4-9 and F-3.4-4.

T-3.4-9 Radioactive Decay of Krypton and Xenon

Delay time for krypton (hour)/xenon(day)	**0**	**10**	**20**	**30**	**40**	**50**	**60**
Total krypton radioactivity/GBq/m^3	7.70E +01	9.43E +00	1.54E +00	2.85E -01	5.69E -02	1.18E -02	2.48E -03
Decay rate for krypton (final	—	1.22E	2.00E	3.70E	7.39E	1.53E	3.22E

radioactivity/initial radioactivity)		-01	-02	-03	-04	-04	-05
Total xenon radioactivity /GBq/m^3	1.53E +03	3.54E +02	9.55E +01	2.57E +01	6.94E +00	1.87E +00	5.05E -01
Decay rate for xenon (final radioactivity/initial radioactivity)	—	2.31E -01	6.24E -02	1.68E -02	4.54E -03	1.22E -03	3.30E -04

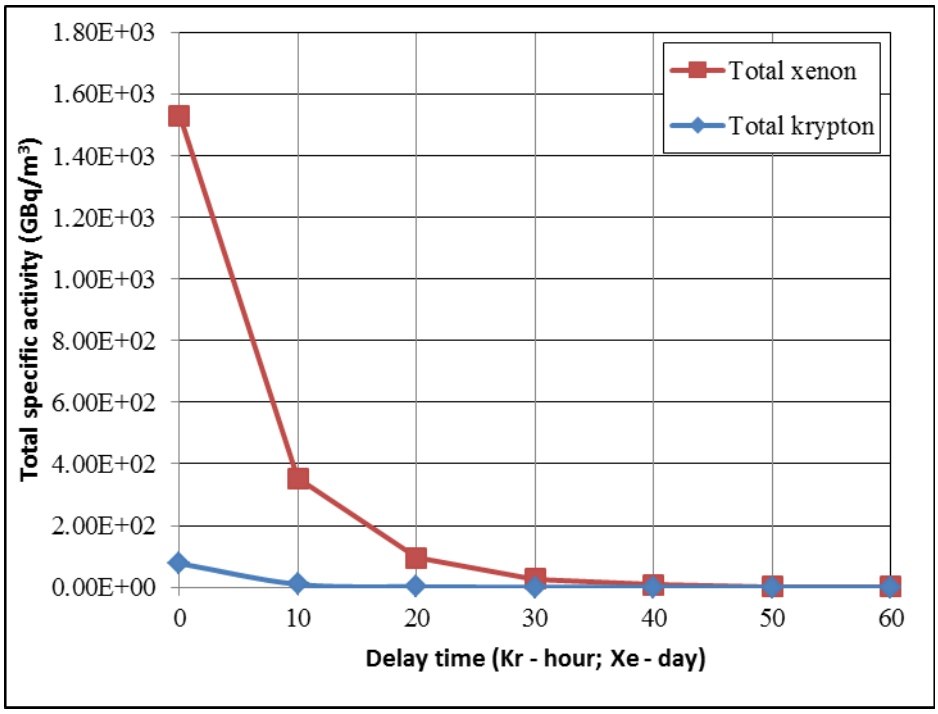

F-3.4-4 Radioactivity of Krypton (except krypton-85) and Xenon over Time for a Given Total Activity

The decay curve shows that the reduction of krypton and xenon (except krypton-85) is most effective during the first 30 hours and 30 days for krypton and xenon respectively. The total radioactivity is reduced to 1/162 from its initial radioactivity and when the delay time reaches 40 hours and 40 days, the radioactivity is reduced to 1/4370. Further increasing the delay time cannot significantly reduce the level of radioactivity but does significantly increase the volume of activated charcoal that will be required. Therefore, the delay period for krypton has been selected as 40 hours and the delay period for xenon has been selected as 40 days. These delay periods have been used to calculate the required volume of activated charcoal in the UK HPR1000. Since krypton-85 has a half-life of 10.72 years, the delay beds have no significant effect on it.

After the delay time is selected, the required activated charcoal can be calculated by the following equation.

$$m_{charcoal} = \frac{F \bullet t}{k_d} \qquad (3.4.2\text{-}2)$$

With:

k_d: Nuclide specific dynamic adsorption coefficient, mL/g;

F: Volume flow rate, mL/min;

$m_{charcoal}$: Mass of activated charcoal, g.

Calculations have been carried out to determine the mass of activated charcoal and the number and size of each delay bed and associated parameters, Reference [56]. From the calculated result, three vertical pressure vessels filled with 7.2 tons activated charcoal are connected in series to treat the process gaseous radioactive waste that enters the TEG [GWTS]. Each delay bed contains 2.4 tons of activated charcoal. The number of delay beds and the quantity of activated charcoal within them is determined by the required delay time, flow rate of gas and operating pressure of the delay beds.

b) Abatement of Iodine

Radioactive isotopes of iodine are mostly retained within the reactor coolant as a result of its high boiling point. However, some isotopes of iodine will still be released into the TEG [GWTS] as a result of degassing. Although the delay beds are designed to delay radioactive xenon and krypton, they also facilitate the decay of any radioactive iodine isotopes in the process gaseous radioactive waste. This is because radioactive iodine isotopes have favourable characteristics that promote its retention within the delay beds, Reference [33].

A technical assessment of abatement techniques for isotopes of iodine has been undertaken, Reference [57]. The assessment identified potential treatment technologies including activated charcoal delay beds, decay tanks, iodox, silver nitrate impregnated substrates, alkaline scrubbing and mercury absorption. The assessment identified that activated charcoal delay beds is an appropriate technique for the treatment of isotopes of iodine in light water reactors.

3.4.2.4.4 Evidence 2d-4: In-process Sampling and Monitoring to Support Demonstrating the Application of BAT

Sampling and monitoring is carried out in order to ensure that the TEG [GWTS] is operating as expected. The operation of the delay beds are influenced by moisture, temperature, pressure and flow rate. As a result, the moisture upstream of the delay beds are continuously measured by two hygrometers to ensure the activated charcoal will operate as expected. The temperature in the delay bed room is continuously measured to ensure it is within set parameters.

One KRT [PRMS] monitor is located at the recirculation flushing line of the TEG [GWTS] to measure the radioactivity level entering the delay beds. One online KRT [PRMS] monitor is arranged at the discharge line downstream of the delay beds of the TEG [GWTS] to measure radioactivity of gases discharged to the DWN [NABVS]. If

the radioactivity reaches the set threshold, an alarm will be triggered to inform the operator and launch appropriate checks and actions.

Grab samples can also be collected from the inlet and outlet of each delay bed to monitoring the adsorption efficiency of the activated charcoal.

The radioactivity monitoring for the TEG [GWTS] is described in PCER Chapter 5, Sub-chapter 5.5.5.3.

3.4.2.5 Argument 2e: Minimise the Radioactivity of Aqueous Discharges by Optimising the Liquid Radioactive Waste Management System

The LRWMS is used to collect, temporarily store, monitor and treat liquid radioactive waste prior to discharge. The liquid radioactive waste will only be discharged to the environment after adequate treatment and after monitoring has demonstrated that concentrations of radioactive substances are low enough to be discharged in compliance with discharge limits.

The LRWMS includes two drainage systems, the RPE [VDS] and the Sewage Recovery System (SRE [SRS]). The RPE [VDS] collects the drainage from the nuclear island. The SRE [SRS] collects drainage from the BWX, hot workshop and hot laboratory. The drainage systems discharge into a common TEU [LWTS] which then connects to the Nuclear Island Liquid Waste Discharge System (TER [NLWDS]). The Conventional Island Liquid Waste Discharge System (SEL [LWDS (CI)]) collects and discharges the potential radioactive effluent from APG [SGBS] and Waste Fluid Collection System for Conventional Island (SEK [LWCS (CI)]).

The radiological and chemical characteristics of the liquid waste streams have been used to inform the design of the UK HPR1000 waste segregation and treatment techniques. The RPE [VDS] and SRE [SRS] drainage systems collect radioactive wastes and maintain segregation in four separate waste streams based on chemical and radiological properties. The four wastes streams are:

a) Process drains;

b) Chemical drains;

c) Floor drains; and

d) Laundry drains.

All of these drains are sent to the TEU [LWTS] for treatment prior to discharge. The design objective of the TEU [LWTS] is to collect and process liquid radioactive waste generated during normal operations (including expected operational transients) by reducing radioactivity and chemical concentrations to levels acceptable for discharge into the environment. The reference design (HRP1000 (FCG3)) TEU [LWTS] comprises a number of abatement plants that have been optimised based on the characteristics of each waste stream. The treatment techniques include filtration,

demineralisation and evaporation processes (Evidence 2e-1: Configuration of the Liquid Radioactive Waste Management System).

A variety of techniques are adopted to minimise the radioactivity of liquid radioactive wastes in the design of the UK HPR1000. These techniques are based on those used in the reference design (HPR1000 (FCG3)) which was developed based on the operational experience of operating plants in China. A technology options assessment has been undertaken to demonstrate that these techniques are consistent with the UK context and to demonstrate that such proposals represent BAT. (Evidence 2e-1: Configuration of the Liquid Radioactive Waste Management System) This programme of work includes assessments that explore the impact on the generation, management and disposal of radioactive waste resulting from:

a) Changing how the waste streams are segregated; and

b) Assessment of alternative treatment techniques.

A series of design policies have been developed that have been used during design reviews of the UK HPR1000 design to ensure that requirements for environmental protection have been achieved (Evidence 2e-3: Design Policies for the Liquid Radioactive Waste Management System).

Some of the radionuclides in the liquid radioactive waste including tritium and carbon-14 do not undergo treatment within the LRWMS and are discharged directly to the environment. The demonstration of the application of BAT for tritium and carbon-14 are presented in Argument 2f (Argument 2f: Minimise Discharge of Tritium) and Argument 2g (Argument 2g: Minimise Discharge of Carbon-14).

Liquid radioactive waste that has been treated in the TEU [LWTS] is then transferred to the TER [NLWDS]. Tritiated Distillate from the TEP [CSTS] is also transferred to the TER [NLWDS] (Evidence 2e-2: Management of Tritiated Distillate from the TEP [CSTS]). The design of the UK HPR1000 provides the future operator with the flexibility to transfer liquid radioactive waste from the TER [NLWDS] to the TEU [LWTS] for further treatment if required.

The UK HPR1000 design includes a number of systems that are used to support the demonstration of performance of LRWMS. These are provided in addition to the sampling and monitoring that will be carried out prior to and during discharge of liquid radioactive wastes into the environment. Collectively these systems allow operators to determine if the systems are performing as expected (Evidence 2d-4: In-process Monitoring to Support Demonstrating the Application of BAT).

The design of the LRWMS has evolved to enable liquid radioactive wastes to be segregated, treated, held and monitored prior to discharge. In-process monitoring is provided to allow the performance of treatment systems to be determined. To support the demonstration of the application of BAT, an assessment whether the LRWMS

abatement techniques provided within the LRWMS are BAT has been undertaken.

3.4.2.5.1 Evidence 2e-1: Configuration of the Liquid Radioactive Waste Management Systems

The design of the LRWMS comprises the following systems:

a) The RPE [VDS], collects and temporarily stores different categories of liquid radioactive waste from the BRX (including the Reactor Building A and the Reactor Building B), the BSX (including the Safeguard Building A, the Safeguard Building B and the Safeguard Building C), the BFX, the BNX, and the BPX and then conveys the liquid radioactive waste to the TEU [LWTS] for processing;

b) The SRE [SRS], collects different categories of liquid radioactive waste from the BWX, hot workshop and hot laboratory and then conveys the liquid radioactive waste to the TEU [LWTS] for processing;

c) The TEU [LWTS], which is used for monitoring, temporarily storing and treating the liquid radioactive wastes generated during normal operations (including expected operation transients);

d) The TER [NLWDS], which collects liquid radioactive waste from the TEU [LWTS] and TEP [CSTS], and then discharges these waste to the environment after reassurance and discharge sampling and monitoring; and

e) The SEL [LWDS (CI)], which collects liquid waste from the APG [SGBS] and SEK [LWCS (CI)], and then discharges these waste to the environment after reassurance and discharge sampling and monitoring.

A diagram of the liquid LRWMS and key interfaces is provided in F-3A-9 in Appendix 3A.

Liquid radioactive wastes generated in the UK HPR1000 will be segregated into the following four categories, Reference [58]:

a) Process drains

Process drains have a low level of chemical impurities. These liquid wastes are from venting and draining or leakages of equipment and pipeline which carries reactor coolant.

b) Chemical drains

Chemical drains have a higher level of chemical impurities and potentially higher radioactivity. These liquid wastes are mainly from the laboratory and the decontamination drains.

c) Floor drains

Floor drains typically have lower radioactive contamination but are high in suspended

solids. These liquid radioactive wastes, with potential contamination (from leakage and purging equipment and floor washings), come from controlled areas with equipment carrying primary effluent, secondary or auxiliary fluid and the decontamination drains in the BRX, BNX, BFX, BSX, BPX and BWX.

d) Laundry drains

Laundry drains are also lower in radioactive contamination but high in suspended solids, fibrous matter, and detergents (organics). These liquid radioactive wastes are from the hot laundry system.

The UK HPR1000 TEU [LWTS] is designed to treat the four categories of liquid radioactive wastes. The TEU [LWTS] is provided with two process drain storage tanks, two chemical drain storage tanks, three floor drain storage tanks and two laundry drain storage tanks to temporarily store the four types of process liquid radioactive wastes. A report demonstrating how the TEU [LWTS] storage tanks have been sized is under preparation.

The TEU [LWTS] operates on a batch processing basis. Before processing, the content in the storage tanks is mixed and subject to sampling and analysis. The TEU [LWTS] is equipped with filters to remove the insoluble solid particles. The liquid radioactive wastes are treated according to their radioactivity and chemical composition, as shown in T-3.4-10, Reference [59]. Technology optioneering has been undertaken to demonstrate that these techniques are consistent with UK context and that such proposals represent BAT, Reference [60].

T-3.4-10 Liquid Radioactive Waste Treatment Techniques

Waste Stream	Abatement System	Function	Impact on Waste Generation	Specification
Process drains	Demineraliser	Remove soluble radioactive nuclides	Generation of spent resins	Resin type: Mixed bed resin Resin volume:1.5m^3 Flow rate:10m^3/h
	Filter	Remove insoluble solid particles.	Generation of spent filters	Filter type: 16”Cartridge filter Filtration rating:5μm (filter size based on PWR operational experience) Flow rate:20m^3/h
	If out of specification diverted to the	Extract distillate and keep radioactive	Generation of high salinity	Operating temperature：104℃ Operating pressure: atm.

Waste Stream	Abatement System	Function	Impact on Waste Generation	Specification
	evaporator	substances in concentrate.	concentrate bottoms	Flow rate:4m^3/h
Chemical drains	Filter	Remove insoluble solid particles.	Generation of spent filters	Filter type: 16”Cartridge filter Filtration rating:5μm (filter size based on PWR operational experience) Flow rate:20m^3/h
	Evaporator	Extract Distillate and keep radioactive substances in concentrate.	Generation of high salinity concentrate	Operating Temperature：104℃ Operating pressure: atm. Flow rate:4m^3/h
Floor drains & Laundry drains	Filter	Remove insoluble solid particles and fibre	Generation of spent filters	Filter type: 16”Cartridge filter Filtration rating:5μm (filter size based on PWR operational experience) Flow rate:20m^3/h

After sampling and analysis, the liquid radioactive waste is transferred to the TER [NLWDS]. The TER [NLWDS] provides additional storage for treated liquid radioactive waste.

The liquid waste from the TER [NLWDS] is discharged to the marine environment through the seal pit after sampling and analysis. If the liquid waste in the TER [NLWDS] does not meet specified discharge requirements, it can be returned to the TEU [LWTS] for re-processing. The TER [NLWDS] liquid waste storage tanks are made of stainless steel to avoid corrosion.

The liquid waste with potential radioactivity from the APG [SGBS] and SEK [LWCS (CI)] is collected by SEL [LWDS (CI)] and discharged to the marine environment through the seal pit after sampling and analysis. If the liquid waste in the SEL [LWDS (CI)] does not meet specified discharge requirements, it can be sent to the TEU [LWTS] for processing.

Further details about the LRWMS are provided in *PCSR Chapter 23 Radioactive Waste Management*, Reference [49].

3.4.2.5.2 Evidence 2e-2: Management of Tritiated Distillate from the TEP [CSTS]

Excess tritium in the primary coolant can be managed by the operator by discharging the TEP [CSTS] evaporator distillate to the TER [NLWDS] rather than reusing it, Reference [61]. Solids and soluble impurities in the reactor coolant are removed using filters and demineralisers before it is treated in the TEP [CSTS] evaporator. The distillate from the evaporator is then degassed prior to it being transferred to the TER [NLWDS]. Gaseous radioactive waste from the degasifier is transferred to the TEG [GWTS] for treatment (Argument 2d: Minimise the Radioactivity of Aqueous Discharges by Optimising the Liquid Radioactive Waste Management System). The operator has the flexibility to transfer liquid radioactive waste from the TER [NLWDS] to the TEU [LWTS] for further treatment if required.

3.4.2.5.3 Evidence 2e-3: Design Policies for the Liquid Radioactive Waste Management System

The design of the LRWMS has been designed based on the following design policies:

a) The LRWMS collects liquid wastes which may contain a significant level of radioactivity. The liquid wastes should be characterised and segregated to enable the treatment of these wastes to be optimised;

b) The LRWMS processing capability is sufficient to ensure that all liquid waste produced during normal operations can be discharged to the environment at concentrations that have been demonstrated to be BAT;

c) The LRWMS discharges the liquid wastes to the environment only after the sampling analysis has demonstrated that the radioactive concentration meets the discharge requirement. The isolation valves on the main discharge pipe must be interlocked to enable them to automatically close in the event that the radiation monitors on the main discharge pipes detect elevated concentrations of radioactivity;

d) The following specific requirements apply to the system design in order to prevent leakage of radioactive liquid:

    1) All the equipment connections are welded with the exception of pressure retaining equipment, which shall be connected by flanges, threads and fast connectors. Pressure retaining equipment must achieve specific requirements for reliability and operation;

    2) Stainless steel or other corrosion-resistant materials are adopted for the liquid radioactive waste system pipes and vessels;

    3) Tanks, vessels and piping in the LRWMS are designed to prevent leakages and dispersion of radioactivity in order to reduce operator doses to ALARP;

    4) The liquid storage tanks of LRWMS are located in retention pit, which have

sufficient capacity to accommodate the liquid waste stored in storage tanks.

e) It is possible to monitor the operation of LRWMS and bring it to a safe condition using the control system.

3.4.2.5.4 Evidence 2e-4: In-process Sampling and Monitoring for Demonstrating Performance

In-process monitoring and discharge sampling and monitoring of the LRWMS is provided to support the demonstration that the system is performing as expected. The function and location of the monitoring and sampling systems are described in T-3.4-11. Monitoring of non-radiochemical properties (including pressure, temperature, level, flow) are also described in T-3.4-11 as these are also required to enable the operator to determine if the LRWMS is operating as intended.

T-3.4-11 The In-process Monitoring on LRWMS

System	Monitor	Location of Monitoring	Objective	Type
TEU [LWTS]	Manual sampling	Recirculation line of storage tanks	Analysing the properties of collected liquid waste to support selection of suitable treatment process	Manual sampling and laboratory analysis.
	Manual sampling	Recirculation line of monitor tanks	Analysing to confirm that the properties of processed water satisfy the end of treatment criteria.	Manual sampling and laboratory analysis.
	Conductivity meter	The distillate pipeline of evaporator	Monitoring conductivity to confirm the processing performance of the evaporator	Continuous online measurement
	Manual sampling	The distillate and concentrate of the evaporator Downstream of each demineraliser	Monitoring the performance of the evaporator and demineralisers	Manual sampling and laboratory analysis.
TER [NLWDS]	Manual sampling	Recirculation line of discharge tanks	Analysing to confirm that the properties of processed water satisfy the discharge criteria.	Manual sampling and laboratory analysis.

System	Monitor	Location of Monitoring	Objective	Type
	On-line monitoring	Discharge pipeline	Monitoring the radioactivity and flow rate to confirm the waste satisfies the discharge criteria. Stop the discharge in case the threshold is exceeded.	Continuous online measurement
	Flow proportional sampler	Discharge pipeline	Analysing to confirm the properties of processed water which has actually been discharged	Automatic sampling and laboratory analysis.
SEL [LWDS (CI)]	Manual sampling	Recirculation line of discharge tanks	Analysing to confirm that the properties of processed water satisfy the discharge criteria.	Manual sampling and laboratory analysis.
	On-line monitoring	Discharge pipeline	Monitoring the radioactivity and flow rate to confirm the waste satisfies the discharge criteria. Stop the discharge in case the threshold is exceeded.	Continuous online measurement
	Flow proportional sampler	Discharge pipeline	Analysing to confirm the properties of processed water which has actually been discharged	Automatic sampling and laboratory analysis.

3.4.2.6 Argument 2f: Minimise Discharge of Tritium

Tritium will be present in process liquids and gases associated with the primary coolant systems and connected bodies of water, such as the SFP. These process liquids and gases are ultimately disposed of to the environment. Tritium will also be present in water vapour that is collected by the HVAC system and in leaks that enter the drains.

Claim 1 demonstrates that the UK HPR1000 has been optimised to minimise the generation of tritium. An assessment of treatment techniques has been undertaken for tritium in gaseous and aqueous radioactive wastes that has identified that there is

currently no abatement techniques that are efficient and cost effective for PWRs (Evidence 2f-2: Assessment of Alternative Options for Tritium Treatment).

The design of the UK HPR1000 therefore includes a number of features that will minimise the amount of tritium that is discharged in gaseous waste to the environment and where possible, preferentially discharge tritium in aqueous wastes. This is because the radiotoxicity of gaseous tritium is higher than liquid tritium. Those techniques that are related to the SFP and the TEG [GWTS] are presented below. Evidence related to other systems will be gathered during a comprehensive review of the UK HPR1000 that will identify any other systems that contain water that is expected to contain tritium.

a) Water vapour containing tritium that evaporates from the SFP is collected by the HVAC system and discharged to the environment. The rate of evaporation depends, in the main, on the tritium concentration in the pool, the temperature of the water in the SFP which is controlled by the PTR [FPCTS], the HVAC flowrate and the air temperature. The PTR [FPCTS] employs three redundant process trains which will provide the future operator with the flexibility to optimise the operation of the SFP in relation to gaseous tritium discharges, worker safety considerations and cost (Evidence 2f-1: Fuel Pool Cooling). An assessment will be undertaken to demonstrate that the engineered controls provided will enable the future operator to apply BAT to temperature controls in the fuel pool to allow the optimisation of the fuel pool temperature; and

b) Tritium gas is converted to tritiated water by the hydrogen recombiner and the heat exchangers in the TEG [GWTS] (Argument 2d: Minimise the Radioactivity of Gaseous Radioactive Waste Discharges by Optimising Gaseous Waste Treatment System).

Tritium that is present in aqueous and gaseous waste does not undergo treatment in the UK HPR1000 before it is discharged to the environment. Assessments of abatement processes for tritium (Evidence 2f-2: Assessment of Alternative Options for Tritium Treatment) concluded that, although some tritium abatement technologies exist, none have been successfully used on a large commercial scale for separating the very low concentrations of tritium present in aqueous and gaseous wastes discharged from a PWR NPP. This is because they require high tritium concentration in the effluent to be treated to be efficient, they require complicated and large process equipment and consume large amounts of energy. The assessments concluded that the time, trouble and cost of implementing these technologies on a PWR NPP is considered to be grossly disproportionate to the benefits they would provide in terms of tritium discharge and dose reduction.

3.4.2.6.1 Evidence 2f-1: The Fuel Pool Cooling

The PTR [FPCTS] removes the decay heat from the spent fuel pool. The PTR [FPCTS]

cooling trains operate continuously as long as there are spent fuel assemblies stored in the pool. The PTR [FPCTS] has three redundant cooling trains. Each train has a cooling pump and an exchanger which is cooled by the RRI [CCWS]. During the normal power operation, the SFP temperature is maintained at 15°C - 50°C by one train of PTR [FPCTS] operation. During the reactor refuelling stage, the SFP temperature is maintained at 15°C – 50°C by two trains of PTR [FPCTS] system operation. The specific temperature of SFP is related to the cooling water temperature of the RRI [CCWS] and the thermal load in SFP.

During normal operation, the range of temperature that RRI [CCWS] system supplies to users is at 15°C - 38°C (the 38 °C corresponds to the maximum water temperature of the Essential Service Water System (SEC [ESWS]) during normal operation condition and the maximum thermal load of the RRI [CCWS] system). In actual operation, the water temperature that RRI [CCWS] system supplies to users is expected to be stable at about 25 °C by adjusting the flow control valve and the heat exchanger bypass control valve in RRI [CCWS] system.

The thermal load of SFP is associated with the number of spent fuel assemblies in SFP. During the power operation, the maximum thermal load of SFP is 5.32 MW (It just occurs at the last moment of spent fuel reloading during refuelling outage, and the SFP is assumed to reach its maximal fuel storage capacity), and during the normal reactor refuelling, the maximum thermal load of SFP is 12.53 MW (It just occurs at the last moment of spent fuel unloading during refuelling outage, and the SFP is assumed to reach its maximal fuel storage capacity). The temperature of SFP is directly related to the thermal load.

During normal operation, the expected water temperature that RRI [CCWS] system supplies to users is stable at about 25°C, at this temperature, the variation trend of the SFP temperature with thermal load under normal power operation, normal reactor refuelling condition is shown in Tables T-3.4-12 and

T-3.4-13.

T-3.4-12 Temperature Variation in SFP - Normal Power Operation, with Cooling Water Temperature at 25°C, One PTR [FPTS] Train is in Service

T-3.4-13 Temperature Variation in SFP - Normal Reactor Refuelling, with Cooling Water Temperature at 25°C, Two PTR [FPTS] Trains are in Service

During normal operation, the maximum water temperature that RRI [CCWS] system supplies to users is 38°C (Conservative value, it is difficult to reach this temperature in actual operation), at this temperature, the variation trend of the SFP temperature with thermal load under normal power operation, normal reactor refuelling condition is shown in tables T-3.4-14 and T-3.4-15.

T-3.4-14 Temperature Variation in SFP - Normal Reactor Refuelling, with Cooling Water Temperature at 38°C, one PTR [FPTS] Train is in Service

T-3.4-15 Temperature Variation in SFP - Normal Reactor Refuelling, with Cooling Water Temperature at 38°C, two PTR [FPTS] Trains are in Service

According to the above analysis, during normal power operation and normal reactor refuelling condition, when RRI [CCWS] system cooling water temperature is 25°C (the expected operation value), the maximum temperature of SFP will not exceed 36.5°C and 37.1°C, so the gaseous radioactive waste escaped from the water is

reduced.

The temperature instruments are installed in the spent fuel pool to monitor the temperature of the pool; each PTR [FPCTS] cooling train is also equipped with temperature and flow rate instruments to monitor the operation of PTR [FPCTS] system. The detailed description is presented in Reference [51].

The water temperature control of spent fuel pool is determined by both the nuclear safety and environmental protection.

3.4.2.6.2 Evidence 2f-2: Assessment of Alternative Options for Tritium Treatment

Tritium is present within the gaseous and liquid radioactive wastes. A summary of the estimated annual releases and proposed annual discharge limit of gaseous and liquid tritium are shown in T-3.4-16 which is based on the Operating Experience (OPEX) data presented in PCER Chapter 6. The majority of tritium is discharged in the liquid effluents.

T-3.4-16 Estimated Discharges and Limits of Tritium by the UK HPR1000

Radionuclide	**Discharge Route**	**Estimated Annual Release**	**Proposed Annual Limits**
		Bq/a/unit	**Bq/a/unit**
Tritium	Gaseous Effluent	7.15×10^{11}	5.49×10^{12}
	Liquid Effluent	2.21×10^{13}	8.11×10^{13}

An assessment of techniques for the abatement of tritium has been undertaken, Reference [62]. Potentially viable abatement processes that were identified and evaluated are shown in T-3.4-17.

T-3.4-17 Options Assessment for the Treatment of Tritium

Tritium Treatment Techniques	**Commercial Applications for Light Water Detritiation**	**Disadvantage**
Water Distillation	None	High energy cost Bulky equipment
Combined Electrolysis Catalytic Exchange	None	Hydrogen explosion risk High energy cost High catalyst and equipment cost
Cryogenic Distillation	None	High energy cost

Tritium Treatment Techniques	Commercial Applications for Light Water Detritiation	Disadvantage
		Low process flow rate
Vapour phase Catalytic exchange	None	Hydrogen explosion risk High energy cost Bulky equipment
Liquid phase Catalytic Exchange	None	Hydrogen explosion risk High energy cost High catalyst and equipment cost

The assessments concluded that none of these technologies are used on a large commercial scale for separating very low concentrations of tritium in PWR NPPs. The same conclusion has been given in the *IAEA Technical Report No.421*, Reference [33] and OECD report, Reference [54]. Therefore, the assessment of technologies for treatment of tritium indicates that none of these technologies are used in operational reactors and thus not considered to be good practice. Therefore, at GDA, not treatment for tritium in the gaseous and liquid effluent is considered to represent BAT.

In addition, the gaseous tritium in the TEG [GWTS] may be water vapour (in the form of HTO) and hydrogen (in the form of HT) released from the reactor coolant. The hydrogen released from the reactor coolant recombines with oxygen to form water in the TEG [GWTS] recombiner, so most of the gaseous tritium in HT can be converted to water and cooled down by the heat exchanger, then drained to the RPE [VDS] as liquid waste. The water vapour in the flushing gas is cooled down by the heat exchangers in TEG [GWTS] and retained in the liquid phase (returned to the reactor coolant or drained off via the RPE [VDS]). These both reduce tritium discharge in gaseous effluents.

3.4.2.7 Argument 2g: Minimise Discharge of Carbon-14

Carbon-14 is present in process liquid and gaseous radioactive wastes and is discharged to the environment together with the liquid and gaseous effluent after treatment. The measures employed to reduce the production of carbon-14 are presented in Claim 1.

Neither the TEG [GWTS] nor the LRWMS that are included in the design of the UK HPR1000 provide abatement technique for carbon-14. An initial assessment of alternative options for the abatement of gaseous carbon-14 has been undertaken (Evidence 2g-1: Assessment of Alternative Options for Gaseous Carbon-14) which identified that there are no commercially viable abatement techniques for gaseous carbon-14 that have been successfully employed on PWR NPPs. The assessment concluded that the time, trouble and costs associated with the development and

implementation of abatement techniques for carbon-14 were grossly disproportionate to the benefits they would provide in terms of carbon-14 abatement and hence dose reduction. The abatement techniques for the liquid carbon-14 will also be assessed. The conclusion that the discharge of the carbon-14 will be minimised and represents BAT will be reviewed when evidence from a comprehensive review of options for the treatment of liquid carbon-14 will be completed.

3.4.2.7.1 Evidence 2g-1: Assessment of Alternative Options for Carbon-14

Gaseous carbon-14 is released from the reactor coolant during degassing of the TEP [CSTS] and is then directly routed to the TEG [GWTS] before being discharged via the DWN [NABVS]. Delay beds are provided in the UK HPR1000 design for abatement of radioactive noble gases. They have no abatement function for gaseous carbon-14 because of its long half-life. Therefore, a technology assessment has been undertaken to support the application of BAT for the abatement of gaseous carbon-14, Reference [63].

A summary of the estimated annual release and proposed annual discharge limits of gaseous carbon-14 are shown in T-3.4-18, which is based on the OPEX data presented in PCER Chapter 6.

T-3.4-18 Estimated Discharge and Limit of Gaseous Carbon-14 in UK HPR1000

Radionuclide	**Discharge route**	**Estimated Annual Release**	**Proposed Annual Discharge Limit**
		Bq/a/unit	**Bq/a/unit**
C-14	Gaseous Effluent	2.88×10^{11}	1.53×10^{12}

IAEA has issued a technical report in 2004, Reference [33], in which various methods for the separation of carbon-14 from gaseous waste were shown, such as alkaline slurry scrubbing, two-step chemical reaction involving sodium hydroxide and lime slurry, molecular sieves and ethanolamine scrubbing. The technical report concluded that these methods are costly and require high energy consumption and application of these separation technologies may therefore be limited. To find out the latest development progress of these technologies, some literature research has been done to confirm whether the technologies was updated, improved or are suitable for use in NPP. The conclusion of the literature search was consistent with the findings of the IAEA technical report.

A report ‘Effluent Release Options from Nuclear Installations’ issued by OECD, Reference [54], identified that carbon-14 from NPPs was discharged without treatment in liquid or gaseous form to the environment. Common practice is to reduce its production at source and allow dilution to take place within the plant processes,

followed by further dilution and subsequent dispersion upon release to the environment.

The assessment of technologies for removal and treatment of carbon-14 in the gaseous waste indicate that none of the technologies are used in operational reactors and thus not considered to be good practice. Therefore, at GDA, not treatment for carbon-14 in the process gaseous effluent is considered to represent BAT.

3.4.3 Claim 3: Minimise the Impact of Discharges on People and Non-Human Biotas

In accordance with UK Government Policy to 'concentrate and contain' radioactive waste, Claims 1, 2 and 4 demonstrate that the generation of radioactive waste, the abatement of the radioactivity within gaseous and aqueous wastes and the volume of solid waste requiring off-site disposal have been optimised. The impact of any unavoidable discharges into the environment must then be optimised to minimise the impact on people and non-human biota.

The timing, form, manner and location of any discharges must be subject to optimisation to minimise doses to members of the public and impacts on the environment. During the GDA, the assessment work is based on the generic site as presented in the PCER Chapter 2.

The Arguments presented in this Claim collectively demonstrate that the design and operation of the UK HPR1000 have been optimised in accordance with the following P&ID requirement in Reference [2]:

- *Minimising the impact of discharges to the environment by means of optimising the design and operation of any discharge outlets.*

The Arguments and Evidence presented within this Claim have been structured to allow a Future Operator to review, assess and if applicable adopt them as part of the demonstration of compliance with the following requirement of the EAs guidance on environmental permits, Reference [3]:

- *2.3.1 The operator shall use the best available techniques in respect of the disposal of radioactive waste pursuant to the permit to dispose of radioactive waste at times, in a form, and in a manner so as to minimise the radiological effects on the environment and members of the public.*
- *2.3.3 The operator shall use the best available techniques to exclude all entrained solids, gases and non-aqueous liquids from radioactive aqueous waste prior to discharge to the environment.*

In developing the Arguments presented to demonstrate the validity of Claim 3, the following *Radioactive Substances Regulation - Environmental Principles* in

Reference [15] are considered to be relevant and have been taken into account:

- *Principle RSMDP7 'When making decisions about the management of radioactive substances, the best available techniques should be used to ensure that the resulting environmental risk and impact are minimised.'*
- *Principle RPDP1 'All exposures to ionising radiation of any member of the public and of the population as a whole shall be kept as low as reasonably achievable (ALARA), economic and social factors being taken into account.'*
- *Principle ENDP2 'Radiological impacts to people and the environment should be avoided and where that is not practicable minimised commensurate with the operations being carried out.'*
- *Principle DEDP3 'Facilities should be designed, built and operated using the best available techniques to minimise the impacts on people and the environment of decommissioning operations and the management of decommissioning wastes.*

The Claim-Argument-Evidence structure for Claim 3 is presented in T-3.4-19.

T-3.4-19 Claim-Argument-Evidence Structure for Claim 3

3.4.3 Claim 3: Minimise the Impact of Discharges on People and Non-Human Biotas
3.4.3.1 Argument 3a: Partitioning of Radionuclides has been Optimised to Minimise the Impact on Members of the Public and the Environment
3.4.3.1.1 Evidence 3a-1: Dose Per Unit Release
3.4.3.2 Argument 3b: Eliminate Solids, Gases and Non-aqueous Liquids Entrained within Aqueous Radioactive Waste
3.4.3.3 Argument 3c: Optimisation of the Discharge Stack Height
3.4.3.3.1 Evidence 3c-1: Stack Height Determination
3.4.3.4.2 Evidence 3c-2: Impact of Gaseous Radioactive Discharges on Members of the Public and Non-Human Biotas
3.4.3.5 Argument 3d: Optimisation of the Location and Timing of Liquid Radioactive Discharges
3.4.3.5.2 Evidence 3d-1: Selecting the Appropriate Discharge Point

3.4.3.5.3 Evidence 3d-2: Control and Management of Liquid Discharges
3.4.3.5.4 Evidence 3d-3: Impact of Liquid Radioactive Discharges on Members of the Public and Non-Human Biotas

3.4.3.1 Argument 3a: Partitioning of Radionuclides has been Optimised to Minimise the Impact on Members of the Public and the Environment

To enable the UK HPR1000 to be operated safely and efficiently it will be necessary to make small discharges of radioactivity into the environment. The impact of these discharges on members of the public and the environment can be influenced by the phase in which the radioactivity is discharged (i.e. liquid or gaseous phase).

Total DPUR for tritium in liquids being discharged into the marine environment is lower than for tritium in gases being discharged into the atmosphere (Evidence 3a-1: Dose Per Unit Release). For a generic site, discharging tritium in the liquid phase is preferable to discharging tritium in the gaseous phase.

Conversely the total DPUR of carbon-14 is higher for carbon-14 in liquids being discharged into the marine environment than carbon-14 in gases being discharged into the atmosphere (Evidence 3a-1: Dose Per Unit Release). For a generic site, discharging carbon-14 in the gaseous phase is therefore preferable.

This Argument will be updated to demonstrate how the phase of tritium is impacted by the design and operation of the UK HPR1000. Evidence will be provided detailing the phase in which tritium and carbon-14 are discharged and to demonstrate if this represents BAT.

3.4.3.1.1 Evidence 3a-1: Dose Per Unit Release

The total DPUR values for tritium and carbon-14 in the liquid and gaseous phase are detailed in T-3.4-20, Reference [64].

T-3.4-20 Total Dose per Unit Release

Radionuclide	**Total DPUR in Liquid Phase (µSv/y per Bq/y)**	**Total DPUR in Gaseous Phase (µSv/y per Bq/y)**
Tritium	8.9E-16	9.6E-13
Carbon-14	4.6E-10	6.8E-11

3.4.3.2 Argument 3b: Eliminate Solids, Gases and Non-aqueous Liquids Entrained within Aqueous Radioactive Waste

The impact of aqueous radioactive waste on members of the public and the

environment can be adversely affected by entrained solids, gases and non-aqueous liquids. Entrained solids, gases and non-aqueous liquids entrained within aqueous radioactive waste will be minimised prior to discharge into the environment by the following techniques implemented in the UK HPR1000:

a) Minimise entrained solids. Various treatment systems, including TEU [LWTS], are provided within the design of the UK HPR1000 that will abate entrained solids using filters;

b) Minimise entrained gases including noble gases and iodine. Entrained gases will be removed by the process of degassing;

c) Prevent entrainment of non-aqueous liquids. Where possible engineered controls have been provided to prevent non-aqueous liquids from contaminating aqueous radioactive waste. The Future operator will also develop management controls that will further minimise the potential to contaminate aqueous waste with non-aqueous liquids; and

d) Minimise entrained non-aqueous liquids such as oils. The potential radioactive oily waste treatment station will remove oil from aqueous wastes.

Detailed information about the treatment systems that contribute to removing entrained solids, gases and non-aqueous liquids from aqueous waste are detailed Argument 2b (Argument 2b: Minimise the Transfer of Radioactivity into the Secondary Circuit) and Argument 2e (Argument 2e: Minimise the Radioactivity of Aqueous Discharges by Optimising the Liquid Radioactive Waste Management System).

3.4.3.3 Argument 3c: Optimisation of the Discharge Stack Height

Radioactive gases are discharged to the environment through the discharge stack of the UK HPR1000 which is located on the roof of the BFX. At GDA the discharge stack height has been assumed to be 70 m based on the discharge stack height of the reference design (HPR1000 (FCG3)).

A dose assessment in PCER Chapter 7 has been undertaken which demonstrates that doses to members of the public and non-human biota are expected to be very low and well within the dose constraint of 0.3 mSv/y for a single source to the public and the screening values of 10 µGy/h to non-human biota (Evidence 3c-2: Impact of Gaseous Radioactive Discharges on Members of the Public and Non-Human Biota).

The actual discharge stack height of the UK HPR1000 will be determined by the future operator to enable site specific parameters to form part of the assessment. The discharge stack height will be determined using an appropriate assessment methodology (Evidence 3c-1: Stack Height Determination) and will consider key attributes including public and worker dose, safety, cost and impact of the environment and the public. The future operator will determine the optimal discharge

stack height prior to its application for a site specific environmental permit and will be required to demonstrate that its proposal represents BAT.

In order to achieve effective dispersion the design of the UK HPR1000 will ensure that a minimum efflux velocity is maintained during normal operations.

Collectively, the above considerations demonstrate that the UK HPR1000 will adopt techniques that will effectively disperse radioactivity entrained in gaseous radioactive waste, and which will result in impacts that are very low and within legally prescribed limits. This is considered to represent BAT for the GDA.

3.4.3.3.1 Evidence 3c-1: Stack Height Determination

It is recognised that the height of the UK HPR1000 discharge stack will impact on the effective dilution and dispersion of gaseous radioactive effluent being discharged into the environment. However, the optimal discharge stack height will be dependent upon the local site topography and meteorological conditions. At GDA these site specific parameters are not know and as such an assumed discharge stack height and effective stack height have been used to enable dose modelling to be carried out. The height of the UK HPR1000 discharge stack will be determined by the future operator at an appropriate time using an appropriate methodology which will take account of a range of attributes including:

a) Meteorological conditions;

b) Local site topography;

c) Dose to the public and the environment;

d) Safety; and

e) Cost.

3.4.3.3.2 Evidence 3c-2: Impact of Gaseous Radioactive Discharges on Members of the Public and Non-Human Biota

An assessment of the impact of gaseous radiological discharges on members of the public and non-human biota has been undertaken using a set of assumptions that are derived for the generic site environment and the proposed discharge limits for the UK HPR1000.

An assessment of the impact from gaseous radioactive discharges has been undertaken, and potential exposures of the individual, the public and non-human biota have been estimated for a number of different pathways at the generic site. The dose from gaseous discharges to the representative person is 1.33E+01 μSv/y and the dose to non-human biota is 0.89 μGy/h. Results show that the impacts are expected to be low and within the dose constraint of 0.3mSv/y for a single source to the public and the screening value of 10 μGy/h to non-human biota. The detailed information is

described in PCER Chapter 7.

3.4.3.4 Argument 3d: Optimisation of the Location and Timing of Liquid Radioactive Discharges

The location at which aqueous radioactive waste are discharged into the marine environment and the prevailing conditions such as tides and currents within the receiving environment will affect their dispersion and influence the impact of liquid radioactive discharges on members of the public and the surrounding environment.

In order to minimise the impact of liquid radioactive discharges on members of the public and the environment, the discharge of liquid radioactive waste will consider the following aspects:

a) Selection of an optimal discharge point. The future operator will select an optimal discharge point that will contribute to the optimised dispersion of the liquid radioactive discharges (Evidence 3d-1: Selecting the Appropriate Discharge Point). The selection of a discharge point is reliant on site specific factors and will be addressed by the future operator;

b) Development of management arrangements. Depending on the characteristics of the site specific receiving waters, the future operator will undertake an assessment to determine if management controls are required to constrain timing and frequency of liquid radioactive discharges into the environment. The future operator will document any requirements within appropriate management arrangements. (Evidence 3d-2: Control and Management of Liquid Discharges);

c) Dose assessment. A dose assessment has been undertaken which has demonstrated that doses to members of the public and non-human biota are expected to be very low and well within the dose constraint of 0.3 mSv/year for a single source to the public and the screening values of 10 μGy/h to non-human biota (Evidence 3d-3: Impact of Liquid Radioactive Discharges on Members of the Public and Non-Human Biota).

It is identified that the timing and location of discharges can influence the dose to members of the public and the environment that results from liquid radioactive discharges. It has also been identified that optimising the location and timing of discharges must take account of site specific factors. Placing a commitment on the future operator to undertake an assessment is considered to be the BAT at GDA. Collectively, these measures demonstrate that the UK HPR1000 will adopt techniques that will effectively dilute and disperse radioactivity that is unavoidably discharged into the environment.

3.4.3.4.1 Evidence 3d-1: Selecting the Appropriate Discharge Point

Liquid radioactive waste that has been demonstrated to meet specified discharge limits will be discharged into the sea. The discharge location will be in close

proximity to the future Nuclear Power Station site. The selected discharge point can increase the extent to which the liquid radioactive waste will become mixed within the receiving waters and subsequently dispersed.

Selecting the appropriate discharge point will take account of hydrological conditions and specific characteristics of the receiving environment. The exact location of the discharge point and the appropriate demonstration of BAT will therefore be determined by the future operator.

3.4.3.4.2 Evidence 3d-2: Control and Management of Liquid Discharges

The management arrangements for the timing and frequency of liquid radioactive discharges will need to take account of various site specific factors including tides and hydrological conditions specific to the receiving environment. The arrangements will demonstrate that BAT is being applied to reduce impacts by selecting optimal dilution and dispersion conditions so that the impact of liquid radioactive discharges can be reduced. These management arrangements will be developed by the future operator of the plant.

3.4.3.4.3 Evidence 3d-3: Impact of Liquid Radioactive Discharges on Members of the Public and Non-Human Biota

An assessment of the impact of liquid radioactive discharges on members of the public and non-human biota has been undertaken based on the assumptions related to the generic site environment and the proposed discharge limits for the UK HPR1000. An assessment of the impact of liquid radioactive discharges has been undertaken, and potential dose to the individual, the public and non-human biota have been estimated for a number of different pathways at the generic site. The dose from liquid discharges to the representative person is 3.19E-01 μSv/y and dose to non-human biota is 1.32E-02 μGy/h. Results show that the impacts are expected to be low. The detailed information is described in PCER Chapter 7.

3.4.4 Claim 4: Minimise the Mass/Volume of Solid and Non-Aqueous Liquid Radioactive Wastes and Spent Fuel

Activities involving radioactive materials and the treatment of gaseous and aqueous effluents will unavoidably create solid and non-aqueous liquid radioactive waste. The design of the UK HPR1000 prevents, and where this is not possible, minimises the volume of solid radioactive waste that will require disposal by transfer to other premises.

The Arguments presented in this Claim collectively demonstrate that the design and operation of the UK HPR1000 have been optimised in accordance with the following P&ID requirement, Reference [2]:

- *Minimising (in terms of mass/volume) solid and non-aqueous liquid radioactive wastes and Spent Fuel.*

The Arguments and Evidence presented within this Claim have been structured to allow a Future Operator to review, assess and if applicable adopt them as part of the demonstration of compliance with the following requirement of the EA's guidance on environmental permits, Reference [3]:

- *Condition 2.3.2 (b) 'The operator shall use the best available techniques in respect of the disposal of radioactive waste pursuant to the permit to minimise the volume of radioactive waste disposed of by transfer to other premises.'*

When developing the Arguments presented to demonstrate the validity of Claim 4, the following *Radioactive Substances Regulation - Environmental Principles*, Reference [15], are considered to be relevant and have been taken into account:

- *Principle RSMDP3 'the best available techniques should be used to ensure that production of radioactive waste is prevented and where that is not practicable minimised with regard to activity and quantity.'*

The Claim-Argument-Evidence structure for Claim 4 is presented in T-3.4-21. The information about minimise the amount of spent fuel refers to Argument 1b (Argument 1b: Minimise the Amount of Spent Fuel by the Efficient Use of Fuel).

T-3.4-21 Claim-Argument-Evidence Structure for Claim 4

3.4.4 Claim 4: Minimise the Mass/Volume of Solid and Non-Aqueous Liquid Radioactive Wastes and Spent Fuel
3.4.4.1 Argument 4a: Minimise the Volume of Structures, Systems and Components that will become Radioactive Waste
3.4.4.1.1 Evidence 4a-1: Reduce the Volume of Solid Radioactive Waste by Optimising the System Configuration
3.4.4.1.2 Evidence 4a-2: Minimise the Volume of Solid Radioactive Waste by Radiation Zoning and Contamination Zoning
3.4.4.1.3 Evidence 4a-3: Minimise the Volume of Solid Radioactive Waste by Optimising the Building Layout
3.4.4.2 Argument 4b: Minimise the Volume of Solid Radioactive Waste by Extending the Design Life of SSCs and Reusing Maintenance Equipment and Tools

3.4.4.2.1 Evidence 4b-1: Extending the Design Life of Equipment
3.4.4.2.2 Evidence 4b-2: Optimising the Design of Filters and Demineraliser to Extend the Equipment Service Life
3.4.4.2.3 Evidence 4b-3: Controlling Operational Parameters to Maintain the Performance of Filters and Demineralisers
3.4.4.2.4 Evidence 4b-4: Minimise the Volume of Solid Radioactive Waste by Reusing Maintenance Equipment and Tools Located in the Controlled Area
3.4.4.3 Argument 4c: Reducing the Volume of Solid and Non-Aqueous Liquid Radioactive Waste Requiring Disposal by Adopting Efficient Segregation and Volume Reduction Techniques
3.4.4.3.1 Evidence 4c-1: Segregation of Waste
3.4.4.3.2 Evidence 4c-2: Efficient Use of Waste Containers
3.4.4.3.3 Evidence 4c-3: Size Reduction of the In-Core Instrumentation Assembly
3.4.4.3.4 Evidence 4c-4: Waste Compaction
3.4.4.3.5 Evidence 4c-5: Decay Storage to Minimise Volumes of Solid Radioactive Waste

3.4.4.1 Argument 4a: Minimise the Volume of Structures, Systems and Components that will become Radioactive Waste

SSCs that have become activated or contaminated with radioactivity during their operating lifetime or during decommissioning of the UK HPR1000 will require management, treatment and disposal as radioactive waste.

To optimise the volume of solid radioactive waste that is generated, the following considerations have been taken into account during the design of the UK HPR1000:

a) Identifying opportunities to optimise the volume of SSCs that have the potential to become activated. Reducing the volume of SSCs that become activated will contribute to minimising the volume of solid radioactive waste that is generated.

b) Identifying opportunities to minimise the likelihood of SSCs becoming contaminated with radioactivity during normal operations and decommissioning. Reducing the potential for SSCs to become contaminated will consequently minimise the volume of solid radioactive waste that is generated.

A review of SSCs has been undertaken using operational experience to identify those that can be removed without reducing the safety or operational performance of the system. For example, two pumps, three exchangers, 104 valves and associated pipes, supports and insulation have been removed during a system design optimisation review (Evidence 4a-1: Reduce the Volume of Solid Radioactive Waste by Optimising the System Configuration). However, during the evolution of the UK HPR1000, it has also been necessary to introduce new systems that contribute to improving the safety performance of the plant (e.g. the Secondary Passive Heat Removal System ASP [SPHRS]). These new systems will result in an increase in the volume of solid radioactive waste that will be generated. The impact on the environmental performance of the UK HPR1000 as a result of any proposed design changes will be taken into account as part of change control procedure.

It has not been possible to quantify the impact on the volume of solid radioactive waste resulting from design rationalisation measures and the introduction of new safety systems. However, the principles of exploring opportunities to rationalise the design, whilst ensuring that environmental factors are considered during design changes are considered to contribute to the application of BAT.

Radiological area classification and the associated shielding measures are adopted within the nuclear island buildings. Engineered and management controls associated with different area classifications will contribute to minimising the volume of solid and non-aqueous radioactive waste that will be generated by:

a) Where possible locating equipment outside of controlled areas;

b) Preventing the spread of contamination from controlled areas into supervised areas; and

c) Where possible locating frequently accessed rooms outside of controlled areas to minimise the generation of secondary wastes (Evidence 4a-2: Minimise the Volume of Solid Radioactive Waste by Radiation Zoning and Contamination Zoning).

The UK HPR1000 nuclear island buildings are located in close proximity to each other. This design feature minimises the quantity of materials, including pipes and concrete used during construction that have the potential to become radioactive waste (Evidence 4a-3: Minimise the Volume of Solid Radioactive Waste by Optimising the Building Layout).

These design practices and principles all contribute to optimising the volume of solid waste that will be generated, during the normal lifetime of the UK HPR1000 and during decommissioning, and collectively are considered to contribute to the application of BAT.

3.4.4.1.1 Evidence 4a-1: Reduce the Volume of Solid Radioactive Waste by

Optimising the System Configuration

The numbers of SSCs in systems such as those that contain radioactive fluid during normal operations or have the potential to be contaminated as a result of leaks have been reduced whilst maintaining the systems safety and operational functions. These improvements have been made to the reference design (HPR1000 (FCG3)), and are also incorporated into the design of the UK HPR1000. Rationalising the number of SSCs contributes to a reduction in the volume of solid radioactive waste that will be produced during maintenance work or during decommissioning. Examples of systems that have been optimised are presented below:

a) Optimise Primary Circuit Temperature Monitoring

As mentioned in Evidence 2a-9 (Evidence 2a-9: Optimise System Configuration), 39 manual valves have been removed along with relevant piping systems for RCP [RCS]. This will reduce the volume of solid radioactive waste produced during plant maintenance or decommissioning.

b) Optimise RIS [SIS] System Configuration

Prior to the reference plant (HPR1000 (FCG3)), the residual heat removal function during plant normal shutdown was performed by a dedicate system, and the RIS [SIS] was kept in stand-by. This dedicated system had redundant pumps, heat exchangers as well as piping to ensure that the system can perform its nuclear safety functions.

A review of the residual heat removal system and the RIS [SIS] was undertaken to determine if the function of both systems could be integrated. This had the potential to deliver a reduction in the volume of solid radioactive waste generated during maintenance and during decommissioning. Following this review the design was changed resulting in the heat removal function being fulfilled by the RIS [SIS], Reference [38]. This design change has also been adopted within the UK HPR1000.

Based on the data of the in-service NPPs operated by CGN, this optimisation resulted in the removal of two pumps, two heat exchangers, 65 valves, 351 m of pipework (about 10 m^3), as well as associated supports and insulations.

c) Optimise APG [SGBS] System Configuration

Before the reference design, two heat exchangers were set in parallel with 100% capacity for each train of the APG [SGBS], one was a regenerative heat exchanger and the other a non-regenerative heat exchanger. During normal operations, the regenerative heat exchanger is put into service as much as possible to save energy. The non-regenerative heat exchanger is on stand-by mode most of the time during plant normal operation.

During improvements of reference design (HPR1000 (FCG3)), consideration has been given to the following aspects:

1) Based on the functional requirement of APG [SGBS], there is no requirement to keep the non-regenerative heat exchanger;

2) In the case of very small SG tube leakage (of a scale that is likely to be undetectable by the sensor), the radioactive substances will spread via the non-regenerative heat exchanger if there is another leak occurred in the tube of non-regenerative heat exchanger;

3) Reducing the volume of components including the exchanger, valves and pipelines.

Based on the advantages mentioned above, the non-regenerative heat exchanger as well as associated valves and pipelines have been removed. This is adopted from the reference design (HPR1000 (FCG3)) for the UK HPR1000, Reference [40].

3.4.4.1.2 Evidence 4a-2: Minimise the Volume of Solid Radioactive Waste by Radiation Zoning and Contamination Zoning

Radiation zoning is used in UK HPR1000, to divide areas and rooms within the nuclear island into controlled areas and supervised areas based on expected radiation levels. Areas and rooms inside the controlled area are then further classified according to their contamination levels, which is called contamination zoning. Radiation zoning and contamination zoning contributes to a reduction in the volume of the solid radioactive waste that will be generated through the following mechanism:

a) The radioactive components are all arranged inside the controlled area. Therefore, the large quantities of components that are arranged in supervised areas are not expected to become contaminated under normal operations. Controls are provided to prevent the spread of contamination from controlled areas to supervised areas. This will reduce the volume of solid radioactive waste generated during decommissioning.

b) The main control room and the associated technical support centre and canteen are located in the supervised area, Reference [65]. This will reduce the requirements for to routinely access into controlled areas. Therefore, the clothing, accessories, personal protective equipment and office consumables that are brought into controlled areas by operators are reduced. This reduces the volume of solid radioactive waste that will be generated as part of the controlled area clearance process and the volume of these consumables that will need managing as radioactive waste.

c) Areas and rooms inside the controlled area in the nuclear island are further classified according to their contamination levels. Areas with high contamination levels, containment systems, contamination barriers and personal protective equipment dressing/undressing areas are designed to limit the spread of contamination and thus to reduce the secondary waste associated with operations

in these areas, Reference [66].

3.4.4.1.3 Evidence 4a-3: Minimise the Volume of Solid Radioactive Waste by Optimising the Building Layout

Based on a widely accepted layout principle, the BRX, BSX, BFX, BNX, and BWX are arranged in close proximity to each other (F-3.4-5 General Layout of UK HPR1000), Reference [67]. This design feature reduces the length of pipes between buildings and the volume of concrete required for construction of the buildings. This minimises the volume of material that has the potential to become solid radioactive waste at decommissioning. The on-site radioactive waste storage facilities are typically located in close proximity to the nuclear island buildings. Solid and non-aqueous radioactive wastes are transferred in containers from the BWX to the radioactive waste storage facilities, whilst aqueous radioactive waste is transferred by pipes. Minimising transfer distances reduce the potential contamination caused by leakage during transportation.

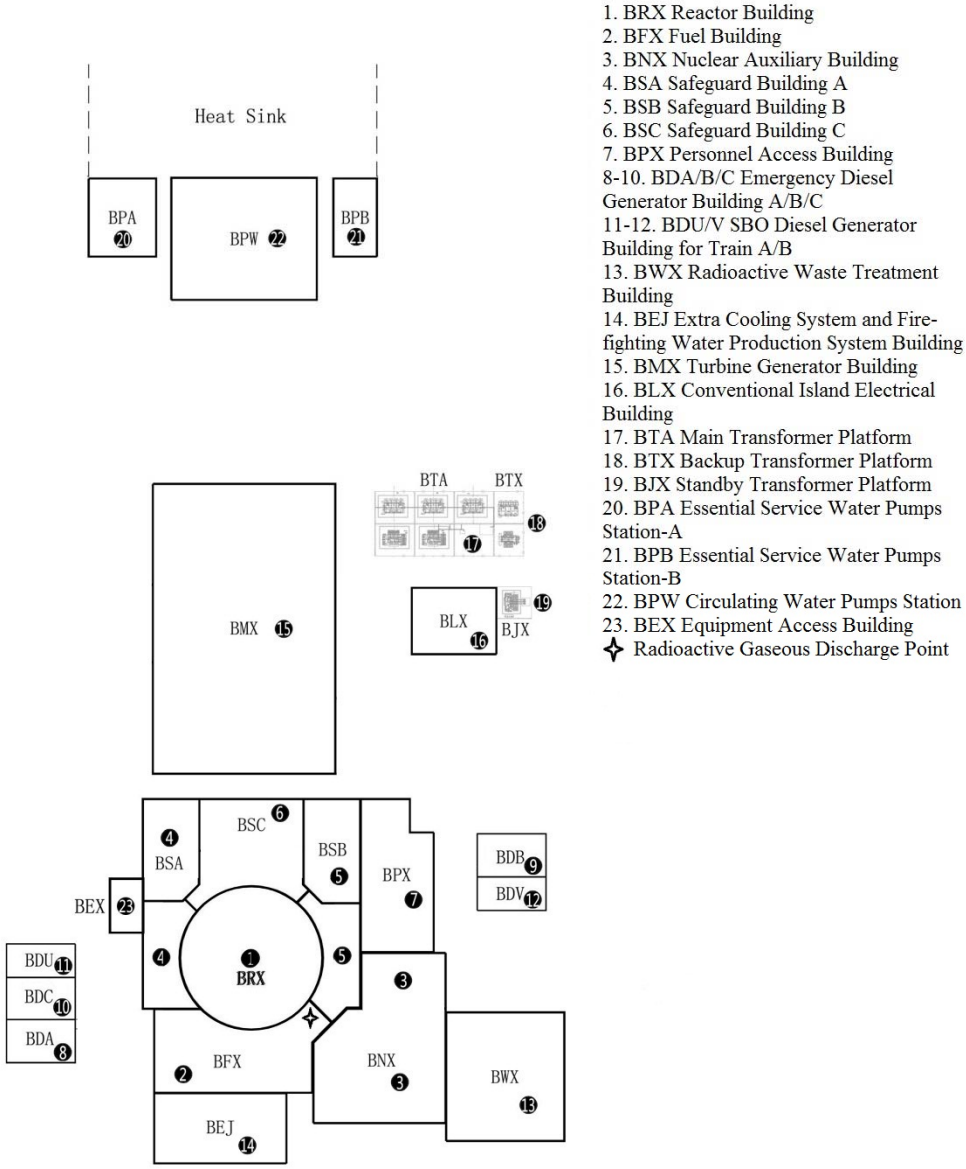

F-3.4-5 General Layout of the UK HPR1000

3.4.4.2 Argument 4b: Minimise the Volume of Solid Radioactive Waste by Extending the Design Life of SSCs and Reusing Maintenance Equipment and Tools

The UK HPR1000 has been designed with a minimum design life of 60 years which is the same as the reference design (HPR1000 (FCG3)). Routine and preventative maintenance will be required throughout the operating lifetime of the UK HPR1000. These maintenance activities will result in the unavoidable generation of radioactive waste. Minimising the volume of solid radioactive waste at source by exploring options to safely reduce the frequency that SSCs need to be maintained and replaced has the potential to reduce the volume of solid radioactive waste that is generated during the operational phase of the UK HPR1000.

In order to reduce the volume of solid radioactive waste, several measures have been taken into consideration as the design has evolved. These include:

a) The SSCs of containment systems are designed to be resistant to environmental conditions, including the effects of radiation, present in the area where they are located. Due to ageing and degradation, and the potential for technological developments, some SSCs will still need to be replaced;

b) As some replacement of SSCs is unavoidable, consideration is given to reducing the frequency of replacement. Based on the technology developed in modern industry and the experience and feedback from suppliers, the design life of some equipment can be safely extended. For example some of the earlier generations of NPPs operated by CGN have a design life of 40 years. Increasing the design life of some SSCs reduces the expected replacement frequency and therefore has the potential to reduce the volume of solid radioactive waste that will be generated (Evidence 4b-1: Extending the Design Life of Equipment);

c) Another source of operational solid radioactive waste is the filters and demineralisers used throughout the UK HPR1000. The use of filters and demineralisers are important design features as they ensure that the chemical and radiochemical conditions of the reactor coolant can be maintained. For example the use of filters contributes to minimising the likelihood of a fuel cladding failure. Based on available technology, the filters and demineralisers media cannot be designed for 60 year design life and replacement is unavoidable. The design life of filters and demineralisers media has been extended by optimising the size of the filters and demineralisers (Evidence 4b-2: Optimising the Design of Filters and Demineralisers to Extend the Equipment Service Life e);

d) During normal operation, the operating conditions of filters and demineralisers will be determined based on the relevant demand including shut down for refuelling and maintenance. Based on the feedback from the equipment vender, the demineraliser media and the filter media cannot resistant high temperature and high pressure difference. Therefore, design measures are adopted and optimised to ensure that the required operating conditions for filters and demineralisers are maintained. These measures will contribute to minimising the frequency of unscheduled replacements (e.g. resulting from damaged filters or demineralisers) (Evidence 4b-3: Controlling Operational Parameters to Maintain the Performance of Filters and Demineralisers);

e) Maintenance work that is carried out in controlled areas will require the use of maintenance equipment and tools. Reusing maintenance equipment and tools will minimise the volume of equipment and tools that need to be brought into the controlled area and ultimately the volume of equipment and tools that will need to be managed, treated and disposed of as solid radioactive waste. In the UK HPR1000, space is provided within the controlled area to store items that are

routinely used, such as maintenance equipment, tools, ladders and scaffolding. Providing storage space allows equipment to be stored for reuse inside the controlled area to reduce the volume of radioactive waste resulting from maintenance activities (Evidence 4b-4 Minimise the Volume of Solid Radioactive Waste by Reusing Maintenance Equipment and Tools Located in the Controlled Area).

The design measures mentioned above are applied in UK HPR1000. Collectively these measures contribute to reducing the volume of solid radioactive waste that will be produced. These measures also reduce the volume of solid radioactive waste that requires treatment (the solid waste treatment is demonstrated in Argument 4c: Reducing the Volume of Solid and Non-Aqueous Liquid Radioactive Waste Requiring Disposal by Adopting Efficient Segregation and Volume Reduction Techniques) and disposal (the solid waste disposal is demonstrated in Claim 5).

3.4.4.2.1 Evidence 4b-1: Extending the Design Life of Equipment

Examples of how the design has been optimised in order to reduce the volume of solid radioactive waste that is generated include:

a) The main components that comprise the pressure containment boundary of the primary circuit (i.e. RCP [RCS]) are designed to have a 60 year design life, Reference [39]. These components include:

   1) RPV;

   2) SGs;

   3) Reactor Coolant Pumps;

   4) Pressuriser; and

   5) Main Coolant Lines and Surge Line.

b) The equipment that comprises other containment systems, particularly equipment which is used to perform important operational and safety functions in the nuclear island, have also, where possible, been designed with a design life of 60 years, Reference [37] and [38]. The expectation of 60 year design life will be documented in technical specification and sent to the equipment supplier as a requirement;

c) Use of relevant codes and standards during component design to ensure that the requirements for quality and reliability are met during the design and manufacture of these components (Evidence 2a-1 Optimise the Design of the Containment Systems).

3.4.4.2.2 Evidence 4b-2: Optimising the Design of Filters and Demineralisers to Extend the Equipment Service Life

Filters

Filters will be replaced according to two criteria: when the pressure drop exceeds the pressure drop threshold or when the activity measured from the filters exceeds the activity threshold. The filters are mostly replaced by the criterion of pressure according to operational experience. In the evolution of UK HPR1000 design, the design of filters is optimised to be replaced with a higher pressure threshold because of the improvement of the filter manufacturing techniques.

The pressure drop threshold of the RCV [CVCS] system in CPR1000 and UK HPR1000 is shown in T-3.4-22. The pressure drop threshold for replacement of UK HPR1000 filters is higher than that of CPR1000, therefore the design life of filters are extended and the total volume of solid radioactive waste generated can be reduced. At the same time, the increase of activity in the replaced filters is estimated to be not significant, the segregation of replaced filters is not impacted by this design change. Therefore the design change of filters is deemed to be positive to the generation of solid waste, with a significant reduction in volume and a slight increase in activity. This also provides flexibilities for future operators to either remain filters for longer operation and reduce the volume of solid radioactive waste, or replace the filters before the pressure drop reaches the threshold and generates the same volume of solid waste with a low activity. The design information of RCV [CVCS] is provided in Reference [68].

T-3.4-22 Optimisation for Replacement of Filter

Parameter of filter	CPR1000	HPR1000 (FCG3)	UK HPR1000
Pressure drop for replacement	0.14 MPa	0.2 MPa	0.2 MPa

Demineraliser Resins

The exchange capacity of demineraliser resins has been increased compared to those used in the CPR1000. The resin exchange capacity of resins used in treatment systems associated with RCV [CVCS], PTR [FPCTS], APG [SGBS] and TEP [CSTS] of the CPR1000 and the UK HPR1000 are shown in T-3.4-23. With a larger exchange capacity, the quantity of ions removed by the same volume of resin increases, thus with the same volume of demineraliser bed, the resins can be less frequently replaced, resulting in a reduction in the volume of solid radioactive waste generated that will be generated.

T-3.4-23 Optimisation for Resin Exchange Capacity

Resin Type	CPR1000	HPR1000 (FCG3)	UK HPR1000
Cationic Bed Resin	1.7 eq/L	2.1 eq/L	2.1 eq/L
Anionic Bed Resin	1.2 eq/L	1.2 eq/L	1.2 eq/L

3.4.4.2.3 Evidence 4b-3: Controlling Operational Parameters to Maintain the Performance of Filters and Demineralisers

Filters

As a result of the materials used to manufacture filters, most filters cannot resist high temperature and high pressure conditions. In the design of the UK HPR1000, instruments measuring temperature and pressure are set to monitor the characteristics of the fluid before it enters the filters. If the temperature or the pressure does not meet the specification of the filters, the isolation valves will automatically close to protect the filters from being damaged.

Normal operational fluctuations are also taken into account and margins are taken when deciding the maximum capacity of the filters to ensure that fluctuations in the flow rate would not exceed the capacity of the filters. This prevents the filters being damaged and ensures that they will operate as intended. The flow of fluid is required to be uniform which means that the pressure drop of the filters will increase slowly until the replacement threshold is reached.

These measures are adopted to ensure the safe operation of the power plant, as well as protecting the components, such that they are replaced less frequently. The design information is presented in Reference [37]. The detail design of RCV [CVCS] is selected as an example in Reference [68].

Demineraliser Resins

As the resins in the demineralisers may be damaged by high temperature and high pressure, controls are provided to maintain the appropriate environmental conditions and extend their design life. Instruments provided to measure the temperature and the pressure are set to monitor the fluid before it enters the demineralisers. If the temperature or the pressure is outside of the design specification for the resins, the isolation valves are automatically closed to protect the resins from being damaged.

The maximum capacity of the demineralisers has taken into account the fluctuations in the flow rate during normal operations, margins in capacity design ensures that the flow rate won't exceed the capacity of the demineralisers in operation. This will ensure that the resins won't get damaged and will operate as intended. The flow of fluid is required to be uniform and the velocity of fluid is selected so that the ion exchange between the resins and the fluid is effective and the saturation of resins is uniform. Optimising the system configuration design maintains the operational performance of the demineraliser resins, the design efficiency of ion exchange and the service life of the demineraliser resins. The design information is presented in Reference [37]. The detail design of RCV [CVCS] is selected as an example in Reference [68].

3.4.4.2.4 Evidence 4b-4: Minimise the Volume of Solid Radioactive Waste by

Reusing Maintenance Equipment and Tools Located in the Controlled Area

The provision of space within the controlled area to enable the future operator to store and reuse maintenance equipment, tools, ladders and scaffolding has been provided in the UK HPR1000. Spare rooms within the controlled area have been reserved for storage. This will enable equipment and tools to be reused instead of being disposed of as solid radioactive waste. Although it increases the occupied space within the controlled area, this design feature facilitates the reuse of tools for maintenance activities throughout the operating life time of the UK HPR1000. Reusing maintenance equipment and tools contributes to a reduction in the volume of solid radioactive waste that will be generated.

A 'hot workshop' room is located at level +20.45m inside the BNX of the UK HPR1000, which will be used to maintain some contaminated equipment and components used in the controlled area of the nuclear island buildings. The "hot workshop" room consists of a test chamber, a machining chamber and two storage chambers. The test chamber is for the periodic testing of equipment and valves. The machining chamber is designed for the machining of contaminated parts during maintenance. The two storage chambers are used for the storage of spare valves, tools, auxiliary machinery and vessels, Reference [69].

3.4.4.3 Argument 4c: Reducing the Volume of Solid and Non-Aqueous Liquid Radioactive Waste Requiring Disposal by Adopting Efficient Segregation and Volume Reduction Techniques

The disposal of solid and non-aqueous liquid radioactive wastes that are generated by the UK HPR1000 will place demands on the capacity of current and planned disposal routes in the UK. The volume of solid radioactive waste that will be disposed of from the UK HPR1000 will be influenced by waste management techniques including the addition of non-radioactive materials associated with encapsulation and packaging.

The segregation of waste plays an important role in reducing of the volume of waste arisings. The necessary space and facilities are provided to allow the future operator to segregate the wastes depending on their physical, chemical and radiological properties. This can ensure that unnecessary cross-contamination of wastes does not occur, and therefore, reduce the volume of Higher Activity Waste (HAW) that is produced (Evidence 4c-1: Segregation of Waste).

In addition to the segregation of waste, the techniques for waste treatment that are currently proposed in the design of the UK HPR1000 are based on those used in the reference design (HPR1000 (FCG3)). Examples of the techniques that are proposed for the UK HPR1000 are:

a) Efficient use of waste containers. All solid radioactive waste will be stored, transported and disposed of in containers that have been designed to maximise packing efficiency with the combined effect of reducing the final package

volumes. Because of the difference in the regulations between the UK and China, an assessment will be undertaken to select UK compliant containers considering both BAT and ALARP (Evidence 4c-2: Efficient Use of Waste Containers);

b) Size reduction. Reducing the size of the waste that is produced during normal operations and maintenance can help make more efficient use of waste containers. The design includes a size reduction technique for packing the in-core instrumentation assembly. (Evidence 4c-3: Size Reduction of the In-Core Instrumentation Assembly);

c) Waste compaction. The compaction of waste is a widely used technique to reduce the volume of dry active waste. The design includes a dedicated facility for waste compaction (Evidence 4c-4:Waste Compaction) which is expected to reduce the volume of waste; and

d) Decay storage to minimise the volumes of solid radioactive waste (Evidence 4c-5: Decay Storage to Minimise Volumes of Solid Radioactive Waste).

It is recognised that there are some volume reduction techniques for Lower Activity Waste (LAW) that are provided by waste service suppliers in the UK that are not available in China. Examples include the metal waste recycling service and the combustible waste treatment service. An optioneering is under preparation, which will explore the relevance of the techniques used in the reference design (HPR1000 (FCG3)) to the UK context and determine whether the design of the UK HPR1000 needs to be modified to adopt techniques that are considered to represent BAT in the UK.

Optimising the volume of solid waste packages will minimise the demand for disposal capacity at appropriately permitted disposal facilities, reduce the size of storage facilities and decrease the number of vehicle movements during transportation. UK HPR1000 management arrangements will be optimised.

3.4.4.3.1 Evidence 4c-1: Segregation of Waste

Waste characterisation, sorting and segregation play an important role in reducing of the activity, mass and volume of waste arisings, Reference [16].

The design of the UK HPR1000 includes several techniques to facilitate segregation of the waste to ensure that unnecessary cross-contamination of waste does not occur. These segregation techniques include:

a) Collection and storage of radioactive spent resins and low activity spent resins in different tanks;
b) Treatment and packing of Intermediate Level Waste (ILW) and LLW in separate buildings using dedicated facilities; and
c) Providing the necessary space and facilities to allow a future operator the flexibility to optimise the segregation, collection, storage and processing of waste.

These facilities are described in Argument 5a (Argument 5a: The Provision of Waste Management Facilities with Sufficient Space and Services to Allow a Future Operator to Install a Range of Waste Management Processes).

A summary of the solid and non-aqueous liquid radioactive waste that will be collected, treated and temporarily stored in the UK HPR1000 is presented in T-3.4-24.

T-3.4-24 Summary of Waste and Spent Fuel Streams

Title	Description	Category
Spent Resins	Arising from the TEU [LWTS], TEP [CSTS], PTR [FPCTS], RCV [CVCS] demineralisers, and APG [SGBS] demineralisers under steam generator tube rupture.	ILW
Low Activity Spent Resins	Arising from the APG [SGBS] demineralisers under normal operational conditions.	Very Low Level Waste (VLLW)
Concentrates	Arising from the TEU [LWTS] evaporators	ILW/LLW
Spent Filter Cartridge	Arising from filter changing in TEU [LWTS], TEP [CSTS], PTR [FPCTS], RCV [CVCS], APG [SGBS]	ILW/LLW
Sludge	Arising from the sumps and tanks associated with the water auxiliary circuits (e.g. RPE [VDS], TEU [LWTS]).	ILW/LLW
Oil	Arising during normal operations, such as maintenance of pumps and hydraulic equipment, decontamination of RPV bolts.	VLLW
Organic Solvent	Arising during normal operations, such as maintenance of pumps and hydraulic equipment, decontamination of RPV bolts.	LLW

Title	Description	Category
Ventilation Filter Cartridge	Arising from the ventilation systems located in the BNX, BFX, safeguards buildings, reactor building and waste treatment building.	VLLW
Dry Active Waste	Contaminated personal protective equipment, monitoring swabs, plastic, clothing, contaminated tools and air filters	LLW/VLLW
In-core Instrumentation Assemblies	Arising from reactor core, used to measure the pressure and temperature of the reactor core.	ILW
RCCAs Stationary Core Component Assemblies (SCCAs)	Activated in-core	HLW
Spent Fuel Assembly (SFA)	Used fuel elements	HLW

The solid radioactive wastes and spent fuel that have been segregated and collected based on the category shown in T-3.4-24, are stored, transferred and treated independently of each other, to prevent mixing and cross contamination. Figure F-3A-10 in Appendix 3A shows the segregation and treatment of the each waste stream before disposal or temporarily storage.

3.4.4.3.2 Evidence 4c-2: Efficient Use of Waste Containers

The design of the UK HPR1000 will use the UK standard for ILW to meet the requirement of the Geological Disposal Facility (GDF). Packing efficiency will be taken into account when optimising the use of treatment techniques and selecting the container as this will impact the final waste volume.

An assessment of ILW disposal packing containers to support the selection of a preferred container will be undertaken.

3.4.4.3.3 Evidence 4c-3: Size Reduction of the In-Core Instrumentation Assembly

The in-core instrumentation assembly is in the shape of a pole and it is difficult to pack into available waste containers. The design of the UK HPR1000 includes a size

reduction technique for packing the in-core instrumentation assembly. Specialist equipment will be used for winding the in-core instrumentation assembly into a reeled bundle as it is extracted from the reactor core when the in-core instrumentation assembly needs to be replaced.

An assessment will be undertaken to support the selection of in-core instrumentation assembly treatment processes.

3.4.4.3.4 Evidence 4c-4: Waste Compaction

Waste compaction is identified as a widely used method to reduce the volume of dry active waste by the IAEA, Reference [70].

The design of the UK HPR1000 provides a pre-compactor and a super-compactor to treat compressible dry active waste to reduce the final waste package volume.

The compaction force of the pre-compactor is 10kN-200kN and the compaction force of the super compactor is 20 MN.

It is recognised that there is a super compaction service for LAW provided by waste service suppliers in the UK. Optimisation to the UK HPR1000 solid radioactive waste management arrangements is being prepared, to ensure that it is compatible with UK context.

Other volume reduction techniques for dry active waste such as incineration will also be considered for use in the UK HPR1000. An assessment report on solid radioactive waste and non-aqueous liquid radioactive waste treatment processes will be produced.

3.4.4.3.5 Evidence 4c-5: Decay Storage to Minimise Volumes of Solid Radioactive Waste

Adoption of the waste hierarchy is embedded in UK policy for the management of solid, liquid and gaseous radioactive wastes, which is reported in the *BAT for the Management of the Generation and Disposal of Radioactive Wastes, Nuclear Industry Safety Directors Forum 2010*, Reference [16].

Decay storage has the potential to minimise quantities of solid radioactive waste requiring disposal which is consistent with the principles of the waste hierarchy.

The design of the UK HPR1000 provides the sufficient space to allow the operator to store VLLW that could decay to exempt waste such as low activity spent resins and ventilation filter cartridges. These wastes can be decayed into an exempt waste through decay storage and then treated as controlled waste to reduce the final volume of solid radioactive waste requiring disposal.

It is also recognised that some solid radioactive wastes may need to be managed as boundary wastes in the UK. The definition of a boundary waste is described in the *Guidance on Decision Making for Management of Wastes Close to the LLW and ILW*

Categorisation Boundary that Could Potentially Cross the LLW boundary, Reference [71].

The LLW / ILW cross boundary waste can be defined as ILW and LLW with a concentration of specific radionuclides that prohibits or significantly challenges its acceptability at existing and planned future disposal facilities for LLW, that could practicably be managed as LLW (on the basis of radiochemical and physicochemical properties) through application of decay storage.

A program of work to identify any potential boundary waste as defined by the Guidance will be undertaken, Reference [71]. These wastes will be stored in the interim storage facility until they have decayed to LLW. This will reduce the final volume of waste to be disposed of in the GDF.

3.4.5 Claim 5: Select the Optimal Disposal Routes for Wastes

Solid and non-aqueous radioactive waste can be disposed of by transfer to a number of premises that offer a range of treatment and disposal services. The design of the UK HPR1000 takes account of these services and will allow a future operator to select optimal waste disposal routes for its solid and non-aqueous radioactive wastes. This claim provides an indicative selection of disposal routes and demonstrates that no orphan wastes will be generated.

The Arguments and Evidence presented in this Claim collectively demonstrate that the design and operation of the UK HPR1000 have been optimised in accordance with the following P&ID requirement, Reference [2]:

- *Selecting optimal disposal routes (taking account of the waste hierarchy and the proximity principle) for those wastes.*

The Arguments and Evidence presented within this Claim have been structured to allow a future operator to review, assess and if applicable adopt them as part of the demonstration of compliance with the following requirement of the EA's guidance on environmental permits, Reference [3]:

- *Condition 2.3.3 (b) 'Characterise, sort, segregate solid and non-aqueous liquid wastes, to facilitate the disposal by optimised disposal routes.'*

The Claim-Argument-Evidence structure for Claim 5 is presented in T-3.4-25.

T-3.4-25 Claim-Argument-Evidence Structure for Claim 5

3.4.5 Claim 5: Select the Optimal Disposal Routes for Wastes
3.4.5.1 Argument 5a: The Provision of Waste Management Facilities with Sufficient Space and Services to Allow a Future Operator to Install a Range of Waste Management Processes
3.4.5.1.1 Evidence 5a-1: Waste Characterisation and Assessment Facilities
3.4.5.1.2 Evidence 5a-2: Segregation and Sorting Facilities
3.4.5.1.3 Evidence 5a-3: Waste Treatment Facilities
3.4.5.1.4 Evidence 5a-4: Waste Storage Capacity
3.4.5.2 Argument 5b: All Solid and Non-Aqueous Lower Activity Wastes have been Demonstrated to be Compatible with Waste Treatment and Disposal Services Available in the UK by Obtaining 'Agreements-In-Principle' from Service Providers
3.4.5.2.1 Evidence 5b-1: Agreement in Principle
3.4.5.3 Argument 5c: 'Disposability Assessments' have been Undertaken to Demonstrate that all Solid HAW are Compatible with Disposability Concepts Prepared by Radioactive Waste Management Ltd for the UK's Proposed GDF
3.4.5.3.1 Evidence 5c-1: Disposability Assessment - Spent Fuel
3.4.5.3.2 Evidence 5c-2: Disposability Assessment - Intermediate Level Waste

3.4.5.1 Argument 5a: The Provision of Waste Management Facilities with Sufficient Space and Services to Allow a Future Operator to Install a Range of Waste Management Processes

The UK HPR1000 will generate solid and non-aqueous radioactive waste throughout the operational and decommissioning phases of the project. A range of off-site waste treatment and disposal services are available and it is expected that these will evolve as technology develops over time. The design of the UK HPR1000 must provide sufficient space to allow the future operator to adapt the techniques to optimise access to off-site waste treatment services in accordance with UK requirements.

The UK HPR1000 will provide a range of facilities and equipment to allow the future operator to select the optimal waste management routes, consistent with the

application of BAT. An options assessment is being undertaken to determine the waste management techniques that will be presented at GDA. Without prejudice to the outcomes of the options assessment, the design of the UK HPR1000 is expected to include techniques that will undertake characterisation (Evidence 5a-1: Waste Characterisation and Assessment Facilities), sorting (Evidence 5a-2: Segregation and Sorting Facilities), treatment (Evidence 5a-3: Waste Treatment Facilities), and storage (Evidence 5a-4: Waste Storage Capacity) of waste prior to it being transferred to an off-site waste management facility.

Implementation of the outcomes of the options assessment is being prepared. It will be demonstrated that BAT will be applied to the UK HPR1000 at GDA. The future operator will present proposals for managing waste prior to operations commencing and provide a demonstration that such proposals represent BAT.

3.4.5.1.1 Evidence 5a-1: Waste Characterisation and Assessment Facilities

The design of the UK HPR1000 will include techniques to undertake sampling and non-destructive assay of solid radioactive waste at source, after treatment or conditioning and prior to transfer to the disposal facility or interim storage facility.

The radiological, physical and chemical properties of waste will be assayed in the characterisation and assessment facilities. This will allow the future operator to effectively segregate the waste and identify the optimal waste disposal route.

A description of the sampling and non-destructive assay techniques for solid radioactive waste in the UK HPR1000 are described in PCER Chapter 5.

3.4.5.1.2 Evidence 5a-2: Segregation and Sorting Facilities

The design of the UK HPR1000 has considered collecting, sorting and treating waste in the different waste treatment facilities based on the waste classification.

The spent resins and spent filter cartridges with high activity are collected in the BNX, and then transferred to the BWX for treatment. The concentrates produced by the TEU [LWTS] are stored in the concentrates tank in the BWX and will be treated directly in the BWX.

Dry active wastes are collected in the designated areas of the nuclear power station during operations and maintenance. Collection points are provided in buildings such as the BRX, BNX and BWX to collect the dry active waste in different packages based on the characteristics of the waste, to prevent mixing and cross contamination. The dry active wastes are then transferred to the Waste Auxiliary Building (BQS) for further sorting and treatment.

A detailed description of the Solid Waste Treatment System (TES [SWTS]) is provided in the System Design Manual, Reference [72].

3.4.5.1.3 Evidence 5a-3: Waste Treatment Facilities

The waste treatment facilities in the UK HPR1000 consist of the ILW waste treatment facility and LLW waste treatment facility. ILW such as spent resins, concentrates and spent filters with high activity are conditioned and packaged in the BWX. The treatment of dry active wastes and spent filters with low activity are undertaken in the BQS. After curing for several days the packages will be transferred to the Temporary Storage Facility (BQT) for storage prior to off-site disposal.

ILW Waste Treatment Facility

The ILW waste treatment facility is located in the BWX. The main function of the ILW waste treatment facility is to receive and treat the ILW that is produced during the operation and maintenance of the UK HPR1000.

T-3.4-26 shows the waste to be treated in the ILW waste treatment facility.

T-3.4-26 Summary of Waste in the ILW Waste Treatment Facility

Waste Type	Arising Area	Treatment Technique
Spent filter with high activity	Nuclear Island, BWX	Encapsulation with grout
Spent resins	Nuclear Island, BWX	Encapsulation with grout
Concentrates	BWX	Encapsulation with grout

The ILW waste treatment facility includes the encapsulation system and cement grouting system to treat the ILW waste.

The main equipment in the encapsulation system includes:

a) Two resin storage tanks;

b) A concentrates storage tank;

c) A blender for mixing the grout and the waste;

d) Conveyors for the waste containers; and

e) An automatic capping and uncapping device for the waste containers.

The main equipment in the cement grouting system includes:

a) A spent filter cartridge replacement and transfer device;

b) A transfer trolley for the spent filter cartridges;

c) A mobile cement grouting device; and

d) An automatic capping and uncapping device for the waste containers.

A detailed description of the TES [SWTS] is provided in the System Design Manual, Reference [72].

LLW Waste Treatment Facility

The LLW waste treatment facility is located in the BQS. It is mainly designed to receive and treat the LLW that is produced during operations and maintenance. These wastes include contaminated personal protective equipment, monitoring swabs, plastic, clothing, contaminated tools and air filters. The treatment line located in the LLW waste treatment facility includes sorting, compacting and grouting processes. The LLW packages will be stored in the LLW temporary storage facility, and finally disposed of by transfer to the designated treatment or disposal facility in a standard container.

The main equipment in the LLW waste treatment facility includes:

a) A cutting device for large metal items and other unusually shaped waste;

b) A sorting device for segregation of the different wastes based on their physical, chemical and radiological characteristics;

c) A pre-compactor and super-compactor for compressing the waste to minimise the final waste volume; and

d) A cement grouting device for packing the waste within the waste container.

It is recognised that there are some off-site LLW treatment facilities in the UK including metal recycling treatment facilities and incineration facilities. The analysis of acceptability of the LLW against UK Waste Acceptance Criteria (WAC) of different treatment services is being undertaken. The determination of application of off-site services has not been finalised at this stage, but any waste treatment routes shall be demonstrated to represent BAT (Evidence 5b-1: Agreement in Principle).

3.4.5.1.4 Evidence 5a-4: Waste Storage Capacity

The capacity to temporarily store waste has been considered in the UK HPR1000. The capacity of storage facilities is to be sufficient to allow a future operator to optimise storage times through the application of BAT.

ILW Interim Storage

The capacity of the BQT in the UK HPR1000 is designed to accommodate the operational waste. According to the requirement of radioactive waste management in the UK, the ILW packages will be disposed of in the GDF. The GDF is being developed by RWM and is not expected to be available for decades. Therefore, ILW packages will be stored in an interim storage facility on site.

According to the requirement of *Industry Guidance: Interim Storage of Higher Activity Waste Packages – Integrated Approach*, Reference [73], the ILW interim storage facility will be developed to accommodate the wastes for 100 years in accordance with the minimum requirements of UK industry guidance.

Spent Fuel Interim Storage (SFIS)

During the UK HPR1000 GDA, assessment of various SFIS technologies will be presented. Further details are provided in *PCSR Chapter 29: Interim Storage of Spent Fuel*, Reference [74].

3.4.5.2 Argument 5b: All Solid and Non-Aqueous Liquid Lower Activity Wastes have been Demonstrated to be Compatible with Waste Treatment and Disposal Services Available in the UK by Obtaining 'Agreements-In-Principle' from Service Providers

The treatment and disposal of lower activity solid and non-aqueous liquid waste must be compliant with WAC published by UK waste service providers. Compliance with the WAC for a particular waste stream is not only a requirement of the contractual conditions agreed between the waste service provider and the owner of the waste but also a requirement of the EA's standard environmental permit (radioactive substances activity) for the disposal of radioactive waste. Low Level Waste Repository Ltd (LLWR) offers a comprehensive range of waste services for the UK nuclear industry. LLWR WAC will be used during GDA to demonstrate that all lower activity solid and non-aqueous radioactive waste generated by the UK HPR1000 will be compatible with waste services offered in the UK, that no orphan wastes will be created and that the future owner/operator will have the opportunity to optimise performance further.

According to the requirements of the GDA process, a requesting party must obtain an "Agreement in Principle" from waste service providers to treat and dispose of its lower activity solid and non-aqueous radioactive waste.

The selection of treatment and disposal services has not been finalised, but all proposed waste treatment routes will be demonstrated to represent BAT prior to applying to LLWR for the agreement-in-principle.

Furthermore, LLWR has prepared a number of strategic BAT studies to analyse the degree to which waste routes support the implementation of the UK strategy for low level solid radioactive waste, Reference [75], and deliver the application of the waste hierarchy. An assessment to demonstrate that its proposals for the treatment and disposal of LAW are compatible with these existing strategic BAT studies will be undertaken.

Obtaining an 'Agreement in Principle' (Evidence 5b-1: Agreement in Principle) will provide assurance that the lower activity solid and non-aqueous radioactive wastes generated from the operation and maintenance of the UK HPR1000 can be disposed of in the UK and that no orphan wastes will be generated during its operational

lifetime. In combination with the forward action to review LLWR's strategic studies, this is considered to represent BAT GDA. It is noted that the future operator will determine the final disposal routes for these wastes and demonstrate that such proposals represent BAT.

3.4.5.2.1 Evidence 5b-1: Agreement in Principle

The LLWR offers a range of waste treatment and disposal services, Reference [76], for lower activity solid and non-aqueous radioactive waste through its waste services contract which includes metal waste recycling, incineration, super compaction and disposal to suitably engineered facilities. In order to ensure that the waste generated in the UK HPR1000 is compatible with WAC for services offered by LLWR, gathering the relevant information as specified by the LLWR is in progress. Engagement with the LLWR is also in progress as part of the GDA process to carry out the establishment of "Agreements in Principle". It is expected to get Agreements in place before the GDA element 4.

3.4.5.3 Argument 5c: 'Disposability Assessments' have been Undertaken to Demonstrate that all Solid HAW are Compatible with Disposability Concepts Prepared by Radioactive Waste Management Ltd for the UK's Proposed GDF

The UK's GDF which is being developed by RWM is not expected to be available for many decades. Some of the HAW generated in the UK HPR1000 will be too radioactive to be disposed of via existing routes. Therefore, the ILW and spent fuel will be stored on site until the GDF is established. This situation is applicable to all of the existing and any new UK reactors fleet and is not unique to the UK HPR1000.

In order to provide assurance that the conditioning and packaging of ILW and spent fuel generated by new nuclear power stations results in packages that are compatible with future GDF, RWM on behalf of the UK's Nuclear Decommissioning Authority undertakes disposability assessments. These assessments determine the degree to which proposals for the management of ILW and spent fuel align with established management and disposal concepts.

The requirements for the disposability assessments have been explored, and engagement with RWM during the development of the GDA submission for the UK HPR1000 is in progress. Information regarding disposability assessments for HAW that is relevant to the Demonstration of BAT will be presented at a later element of GDA. Disposability assessments will be prepared as follows:

a) Disposability assessment of spent fuel in the proposed GDF (Evidence 5c-1: Disposability Assessment - Spent Fuel); and

b) Disposability assessment of ILW in the proposed GDF (Evidence 5c-2: Disposability Assessment - Intermediate Level Waste).

The above disposability assessment are considered to represent BAT for the GDA

process as they will provide assurance that packages of ILW and spent fuel produced by the UK HPR1000 will be accepted by the proposed GDF. It is noted that the future operator will determine the final disposal routes for these wastes and demonstrate that such proposals represent BAT.

3.4.5.3.1 Evidence 5c-1: Disposability Assessment - Spent Fuel

The characteristics of spent fuel from the UK HPR1000 and the option for packaging, interim storage and final disposal are described in the *PCSR Chapter 29: Interim Storage of Spent Fuel*, Reference [74]. These options are based upon good practice as currently applied in other countries.

At this phase of the project, the storage proposal for spent fuel has not yet been determined. There are several possible options for spent fuel packaging prior to interim storage. There is currently no final disposal facility in the UK. However, in order to ensure that the SFA can be disposed of in all potential options, the storage facility of the UK HPR1000 will take into consideration the retrieval of SFAs from SFIS.

The requesting party will provide information on the spent fuel expected to arise from the operation of the reactor and information on preferred spent fuel containers according to the RWM's requirement, Reference [77]. After that, the disposability assessment by RWM will be conducted and the results can be used to support the endorsement for the site specific spent fuel management strategy and determine the final container types.

3.4.5.3.2 Evidence 5c-2: Disposability Assessment - Intermediate Level Waste

During the GDA process, the compatibility of the proposed waste packaging options with anticipated long-term waste management requirements need to be assessed. The information relating to the ILW treatment option of encapsulation in a standard ILW container and the waste properties including source term, will be submitted to RWM to undertake the disposability assessment.

The requesting party will provide information on the wastes expected to arise from the operation of the reactor according to the RWM's requirement, Reference [77]. After that, a Letter of Compliance process will be used to obtain endorsement for site specific wastes and determine the final packaging approaches.

3.5 Conclusions

As part of the GDA of the UK HPR1000 best available techniques are being applied to demonstrate that its design and operation have been optimised. This PCER Chapter demonstrates that each of the requirements in the P&ID that require the application of BAT is being addressed. The Claim-Argument-Evidence approach that has successfully been used by other requesting parties in the UK has been used to structure the demonstration of the application of BAT for the UK HPR1000. The

demonstration of BAT will be reviewed and updated throughout the life time of the project and during the lifecycle of the UK HPR1000. The Claims-Arguments-Evidence presented in this PCER Chapter demonstrates that the design of the UK HPR1000 represents BAT and that the doses to members of the public and the environment during normal operations will be ALARA.

3.6 References

[1] CGN, BAT Methodology, GHX00100055DOHB03GN, Rev C, July 2018.

[2] EA, Process and Information Document for Generic Assessment of Candidate Nuclear Power Plant Designs, Version 3, 2016.

[3] EA, How to Comply with your Environmental Permit for Radioactive Substances on a Nuclear Licensed Site, GEHO0812BUSS-E-E, 478_10, Version 2, 21 August, 2012.

[4] The Stationery Office, The Environmental Permitting (England and Wales) Regulations 2016, No.1154, 2016.

[5] ICRP, 1990 Recommendations of the International Commission on Radiological Protection, ICRP Publication 60, Ann ICRP, 21, 1-3, 1991.

[6] ICRP, The 2007 Recommendations of the International Commission on Radiological Protection, ICRP Publication 103. Ann ICRP, 37, 2-4, 2007.

[7] IAEA, Radiation Protection and Safety of Radiation Sources: International Basic Safety Standards, No. GSR Part 3, 2014.

[8] Official Journal of the European Union, Council Directive 2013/59 Euratom – Protection Against Ionising Radiation, December 2013.

[9] OSPAR (1992). Convention for the Protection of the Marine Environment of the North-East Atlantic. Text as amended on 24 July 1998, updated on 9 May 2002, 7 February 2005 and 18 May 2006, Amendments to Annexes II and III adopted at OSPAR 2007.

[10] Department of Energy and Climate Change, Department of Environment Northern Ireland, The Scottish Government and Welsh Assembly Government, UK Strategy for Radioactive Discharges, July 2009.

[11] Department for Environment, Food and Rural Affairs (Defra), Department of Trade and Industry (DTI), and the Devolved Administrations, Policy for the Long Term Management of Solid Low Level Radioactive Waste in the United Kingdom, March 2007.

[12] EA, RSR: Principles of Optimisation in the Management and Disposal of Radioactive Waste, Version 2, April 2010.

[13] EA, The Regulation of Radioactive Substances Activities on Nuclear Licensed Sites, Regulatory Guidance Series, No RSR 2, Version 2, August 2012.

[14] EA, Criteria for Setting Limits on the Discharge of Radioactive Waste from Nuclear Sites, Version 1, June 2012.

[15] EA, Radioactive Substances Regulation – Environmental Principles, Version 2, April 2010.

[16] Nuclear Industry Safety Directors Forum 2010, Best Available Techniques (BAT) for the Management of the Generation and Disposal of Radioactive Wastes, A Nuclear Industry Code of Practice, Issue 1, December 2010.

[17] GNS, Requirements on Optioneering & Decision-Making, HRP/GDA/PROC/0012, Version 000, May 2018.

[18] GNS, Pre-Construction Safety Report Chapter 20 MSQA and Safety Case Management, HPR/GDA/PCSR/0020, Revision 000, September 2018.

[19] IAEA, Review of Fuel Failures in Water Cooled Reactors, No. NF-T-2.1, 2010.

[20] V. Inozemtsev; V. Onufriev, Results of the IAEA Study of Fuel Failures in Water Cooled Reactors in 2006-2010, Top Fuel 2013, September 2013.

[21] CGN, Topical Report on Grid to Rod Fretting (GTRF) Performance of STEP-12 Fuel Assembly, No. GH0-300-RP-008, Rev A, September 2018.

[22] CGN, Fuel Assembly Anti-debris Filter Hydraulic Test Report, No. GH0-500-RP-003, Rev A, August 2018.

[23] CGN, Prevention Measures on Radioactive Contamination for Fuel Manufacturing, No. GH0-400-RP-008, Rev A, September 2018.

[24] CGN, The Out-pile Corrosion Performance of CZ Alloy, No. Z03-120-RP-015, Rev B, August 2018.

[25] GNS, Pre-Construction Safety Report Chapter 28 Fuel Route and Storage, HPR/GDA/PCSR/0028, Revision 000, September 2018.

[26] CGN, KRT - Plant Radiation Monitoring System Design Manual Chapter 3 System Functions and Design Bases, GHX17KRT003DIYK45GN, Rev B, September 2018.

[27] P. M. Abraham et al, Diffusion of Gases in Solids – Tritium Diffusion in Reactor Cladding Materials & Xenon Diffusion in Uranium Dioxide, ORO-3508-8, North Carlina Stata University, 1972.

[28] C. Andrieu, S. Ravel, G. Ducros, C. Lemaignan, Release of fission tritium through Zircaloy-4 fuel cladding tubes, Journal of Nuclear Materials 347 (2005), 2005.

[29] GNS, Pre-Construction Safety Report Chapter 21 Reactor Chemistry, HPR/GDA/PCSR/0021, Revision 000, September 2018.

[30] CGN, Report of Radionuclide Selection during Normal Operation, GHX00800001DRDG03GN, Rev B, June 2018.

[31] RCC-M, Design and Construction Rules for Mechanical Components of PWR Nuclear Islands, 2007.

[32] GNS, Pre-Construction Safety Report Chapter 5 Reactor Core, HPR/GDA/PCSR/0005, Revision 000, September 2018.

[33] IAEA, Technical, Management of Waste Containing Tritium and Carbon-14, Report 421, July, 2004.

[34] V.P. Rublevskii; V. N. Yatsenko, NPP Nuclear Power Reactors as ^{14}C Sources, Atomic Energy, Vol. 121 Issue 2, 148-154, 2016.

[35] Karen Kim; G.F. Palino; H.R. Helmholz, Estimation of ^{14}C in Nuclear Power Plant Gaseous Effluents, NRC Public Meeting, February 2010.

[36] American Society of Mechanical Engineers, Boiler and Pressure Vessel Code, 2007edition, 2008.

[37] GNS, Pre-Construction Safety Report Chapter 10 Auxiliary Systems,

HPR/GDA/PCSR/0010, Revision 000, September 2018.

[38] GNS, Pre-Construction Safety Report Chapter 7 Safety Systems, HPR/GDA/PCSR/0007, Revision 000, September 2018.

[39] GNS, Pre-Construction Safety Report Chapter 6 Reactor Coolant System, HPR/GDA/PCSR/0006, Revision 000, September 2018

[40] GNS, Pre-Construction Safety Report Chapter 11 Steam and Power Conversion System, HPR/GDA/PCSR/0011, Revision 000, September 2018.

[41] IAEA, Safety of Nuclear Power Plants: Design, IAEA Specific Safety Requirements NO. SSR-2/1, 2016 edition.

[42] GNS, Pre-Construction Safety Report Chapter 8 Instrumentation and Control, HPR/GDA/PCSR/0008, Revision 000, September 2018.

[43] CGN, Design Manual for Valve Selection, GHX40000001DNHX03GN, Rev A, January, 2018.

[44] U.S. Nuclear Regulatory Commission, Guidance on Monitoring and Responding to Reactor Coolant System Leakage, Revision 1, May 2008.

[45] CGN, RCP-Reactor Coolant System Design Manual Chapter 6 System Operation and Maintenance, GHX17RCP006DNHX45GN, Rev C, September 2018.

[46] CGN, RCV-Chemical and Volume Control System Design Manual Chapter 6 System Operation and Maintenance, GHX17RCV006DNHX45GN, Rev B, September 2018.

[47] CGN, RRI-Component Cooling Water System Design Manual Chapter 6 System Operation and Maintenance, GHX17RRI006DNHX45GN, Rev B, September 2018.

[48] CGN, APG-Steam Generator Blowdown System Design Manual Chapter 6 System Operation and Maintenance, GHX17APG006DNHX45GN, Rev C, September 2018.

[49] GNS, Pre-Construction Safety Report Chapter 23 Radioactive Waste Management, HPR/GDA/PCSR/0023, Revision 000, September 2018.

[50] GNS, Pre-Construction Safety Report Chapter 16 Civil Works & Structures, HPR/GDA/PCSR/0016, Revision 000, September 2018.

[51] CGN, Fuel Pool Cooling and Treatment System Design Manual Chapter 6 System Operation and Maintenance, GHX17PTR006DNHX45GN, Rev A, July 2018.

[52] CGN, Introduction of Controlled Area Ventilation Systems, GHX08000002DCNT03TR, Rev A, August 2018.

[53] ES_0_1738-1, Ventilation Systems for Radiological Facilities Design Guide, Issue 1, May 2015.

[54] Nuclear Energy Agency, OECD, Effluent Release Options from Nuclear Installations: Technical Background and Regulatory, ISBN 92-64-02146-9, 2003.

[55] GGN, Optioneering Report of Gaseous Radioactive Waste Processing

Technique, GHX00100038DNFF03GN, Rev B, September 2018.

[56] CGN, Sizing Report of the Activated Charcoal Delay Beds, GHX00100039DNFF03GN, Rev C, September 2018.

[57] CGN, The Assessment about Treatment Technique of Iodine, GHX00100040DNFF03GN, Rev D, September 2018.

[58] CGN, TEU- Liquid Waste Treatment System Design Manual Chapter 3 System Functions and Design Bases, GH917TEU003DNFF45GN, Rev B, September 2018.

[59] CGN, TEU- Liquid Waste Treatment System Design Manual Chapter 4 System and Component Design, GH917TEU004DNFF45GN, Rev B, September 2018

[60] CGN, Optioneering Report of Liquid Radioactive Waste Processing Techniques, GHX00100042DNFF03GN, Rev B, September 2018.

[61] CGN, TEP- Coolant Storage and Treatment System Design Manual Chapter 6 System Operation and Maintenance, GHX17TEP006DNFF45GN, Rev A, July 2018.

[62] CGN, The Assessment about the Abatement of Tritium, GHX00100043DNFF03GN, Rev C, September 2018.

[63] CGN, The Assessment about Treatment Technique of Carbon-14, GHX00100041DNFF03GN, Rev C, September 2018.

[64] EA, Initial Radiological Assessment Methodology – Part 1 User Report, Science Report: SC030162/SR1, May 2006.

[65] CGN, Safeguard Building General Arrangement Drawing Plan View +13.20m, GHXSX000006DNBZ43DD, Rev B, September 2018.

[66] CGN, Radiation and Contamination Zoning Topic Report, GHX40200062DNFP03GN, Rev A, August 2018.

[67] GNS, Pre-Construction Safety Report Chapter 2 General Plant Description, HPR/GDA/PCSR/0002, Revision 000, September 2018.

[68] CGN, RCV-Chemical and Volume Control System Design Manual Chapter 4 System and Component Design, GHX17RCV004DNHX45GN, Rev B, September 2018.

[69] CGN, Nuclear Auxiliary Building General Arrangement Drawing Plan View +20.45m, GH1NX000009DNBZ43DD, Rev B, September 2018.

[70] IAEA, Selection of Technical Solutions for the Management of Radioactive Waste, IAEA-TECDOC-1817, July 2017.

[71] LLWR, Guidance on Decision Making for Management of Wastes Close to the LLW and ILW Categorisation Boundary that Could Potentially Cross the LLW Boundary, Issue 2, February 2013.

[72] CGN, Solid Waste Treatment System Design Manual Chapter 4 System and Component Design, GHX17TES004DNFF45GN, Rev B, September 2018.

[73] NDA, Industry Guidance: Interim Storage of Higher Activity Waste Packages – Integrated Approach, Issue 3, November 2017.

[74] GNS, Pre-Construction Safety Report Chapter 29 Interim Storage of Spent Fuel, HPR/GDA/PCSR/0029, Revision 000, September 2018.

[75] NDA, UK Strategy for the Management of Solid Low Level Radioactive Waste from the Nuclear Industry, August 2010.

[76] LLW Repository Ltd, Waste Services Contract: Waste Acceptance Criteria – Low Level Waste Disposal, WSC-WAC-LOW-Version 5.0, Issue 1, July 2016.

[77] NDA, Geological Disposal: Generic Guidance on the Preparation of Submissions for the Disposability Assessments of Waste Packaging Proposals, WPS GD no. WPS/908/05, July 2016.

Appendix 3A The Appended Figures

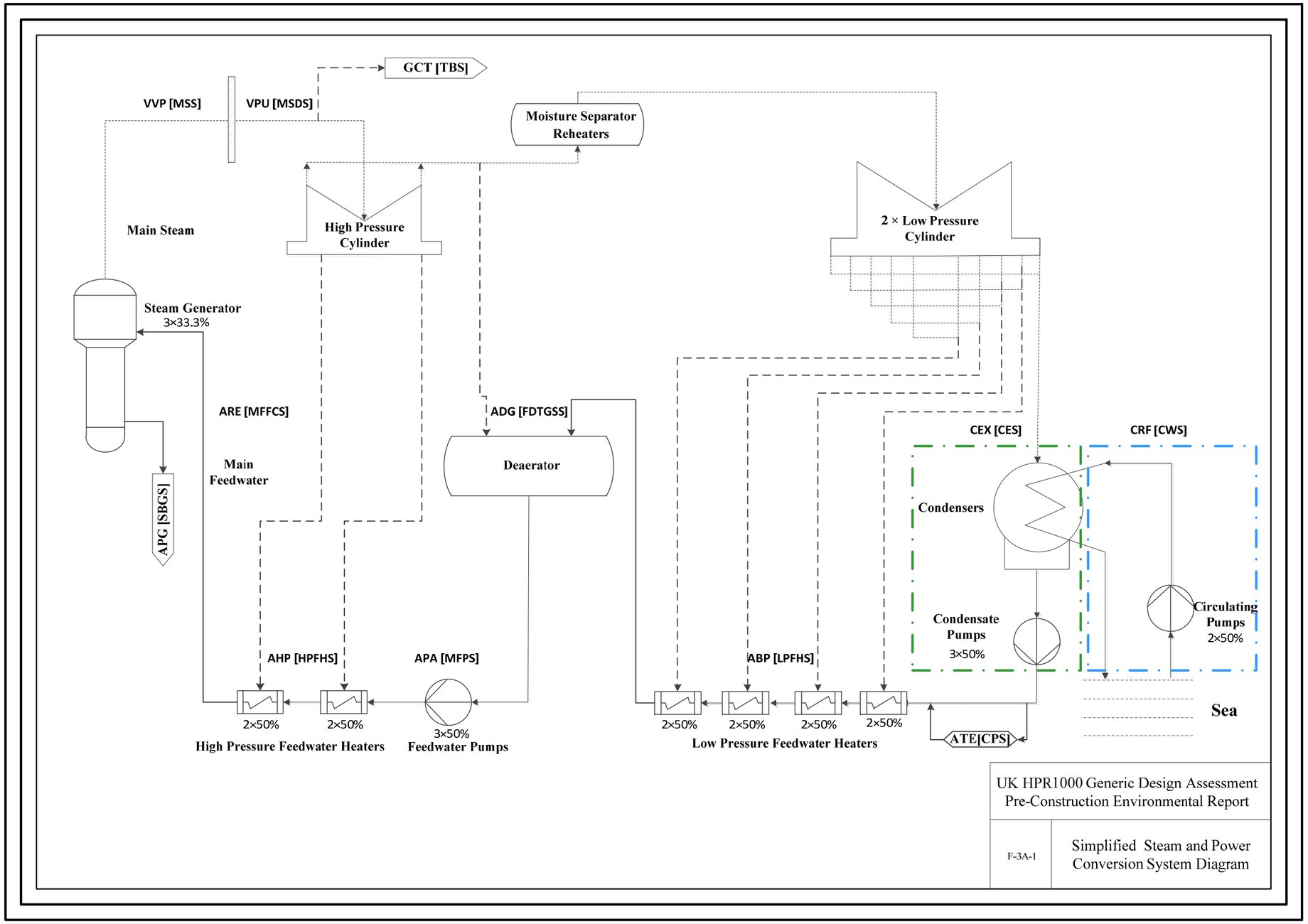

F-3A-1 Simplified Diagram of Steam and Power Conversion System

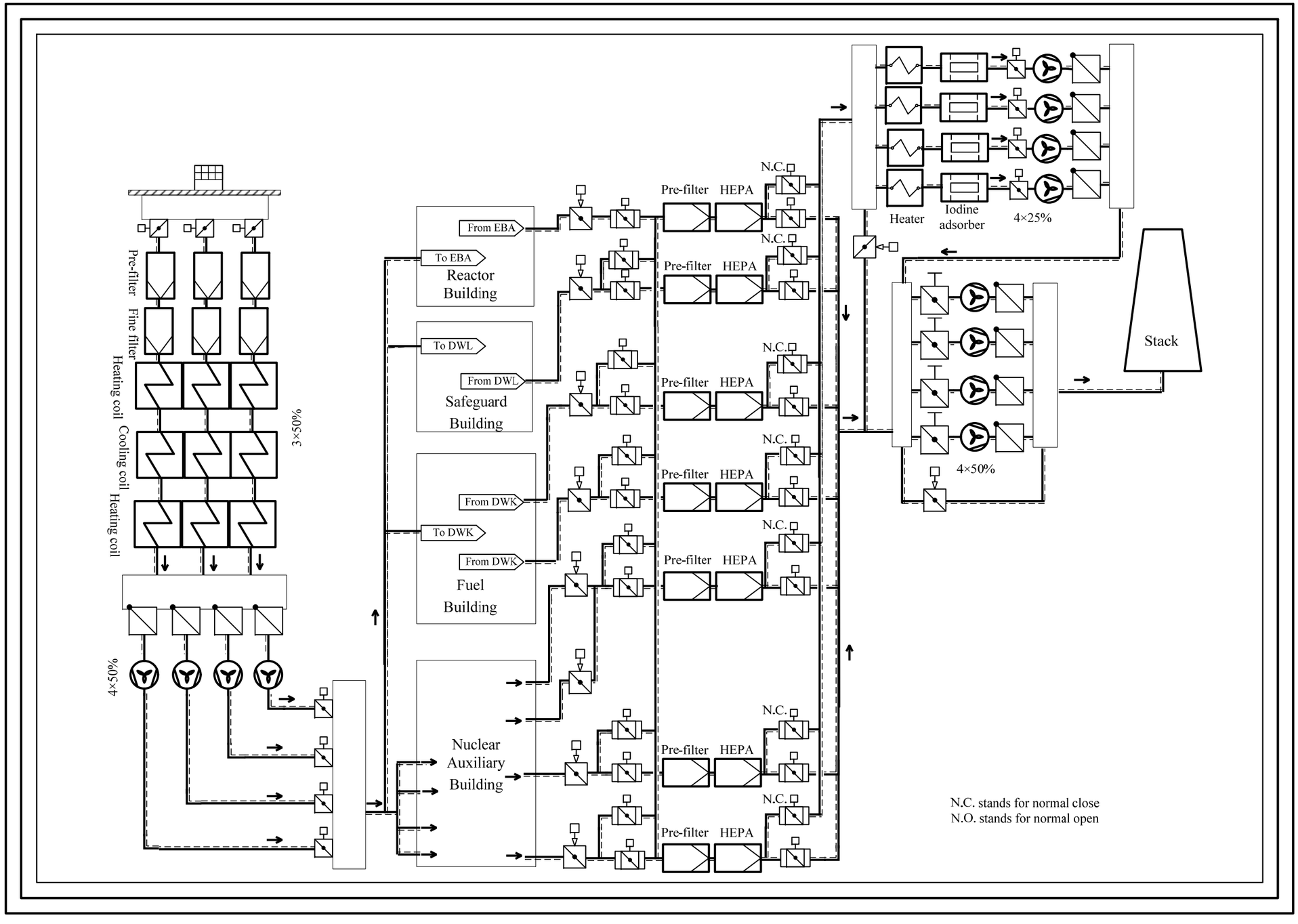

F-3A-2 DWN [NABVS] Simplified Diagram

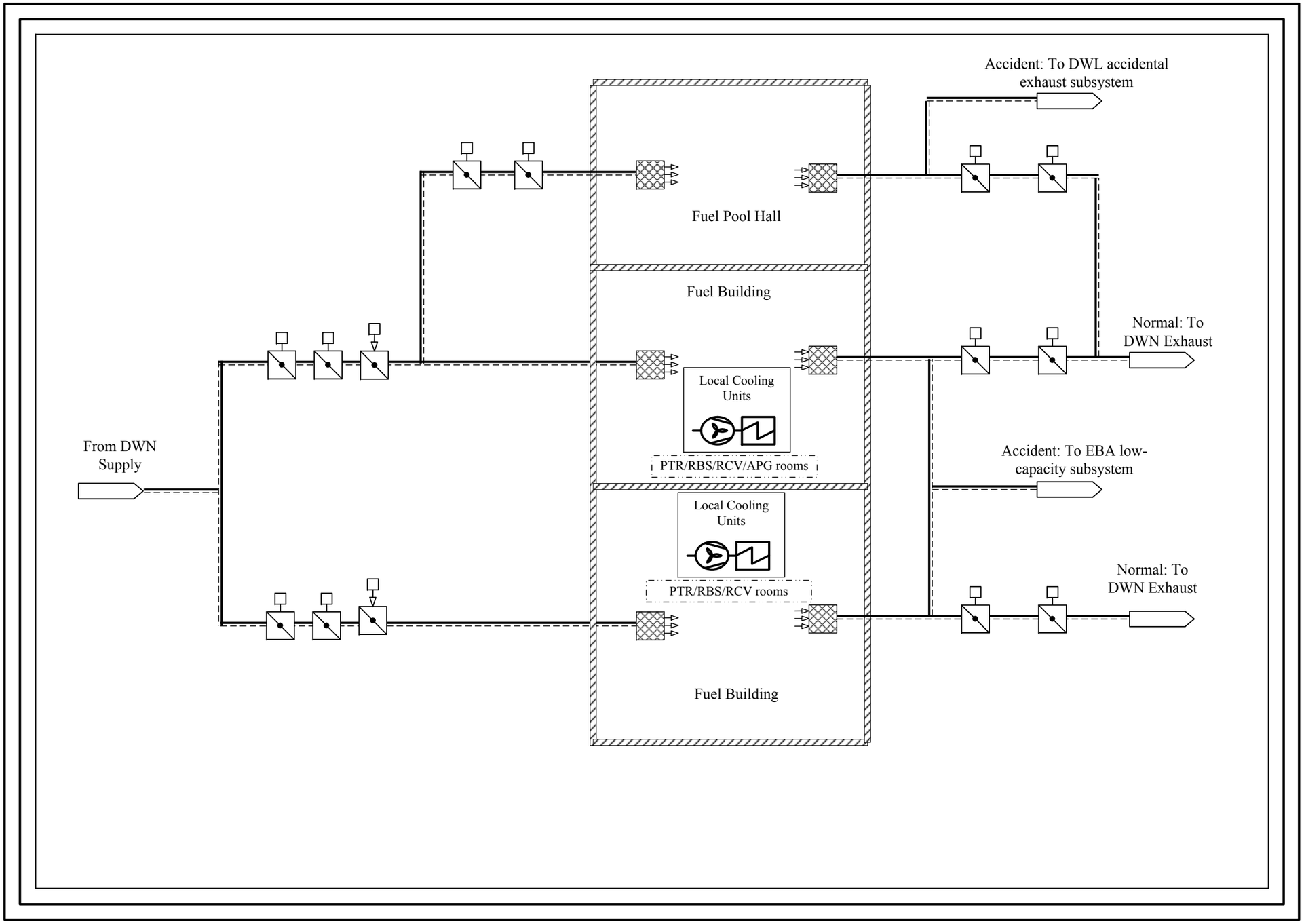

F-3A-3 DWK [FBVS] Simplified Diagram

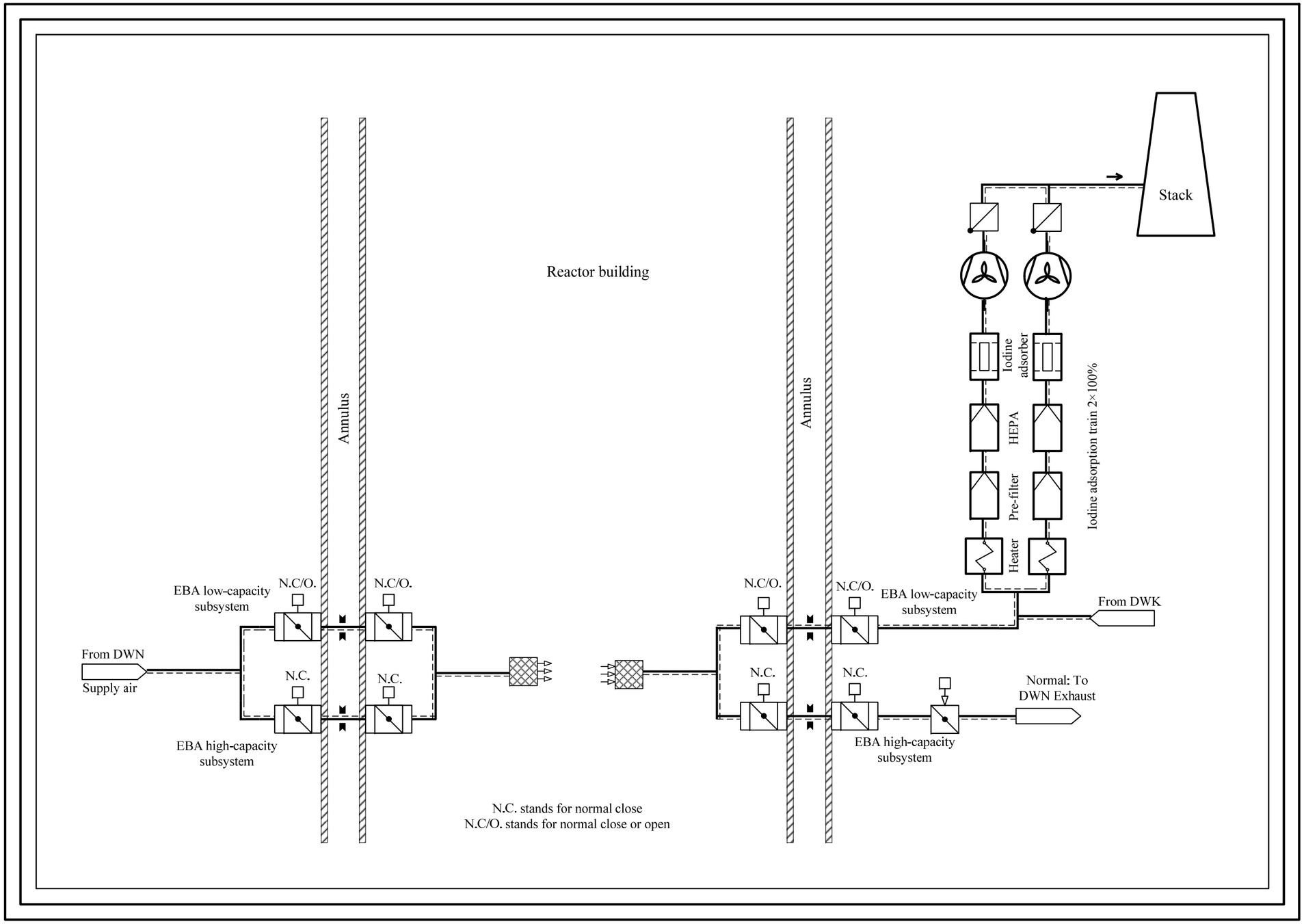

F-3A-4 EBA [CSBVS] Simplified Diagram

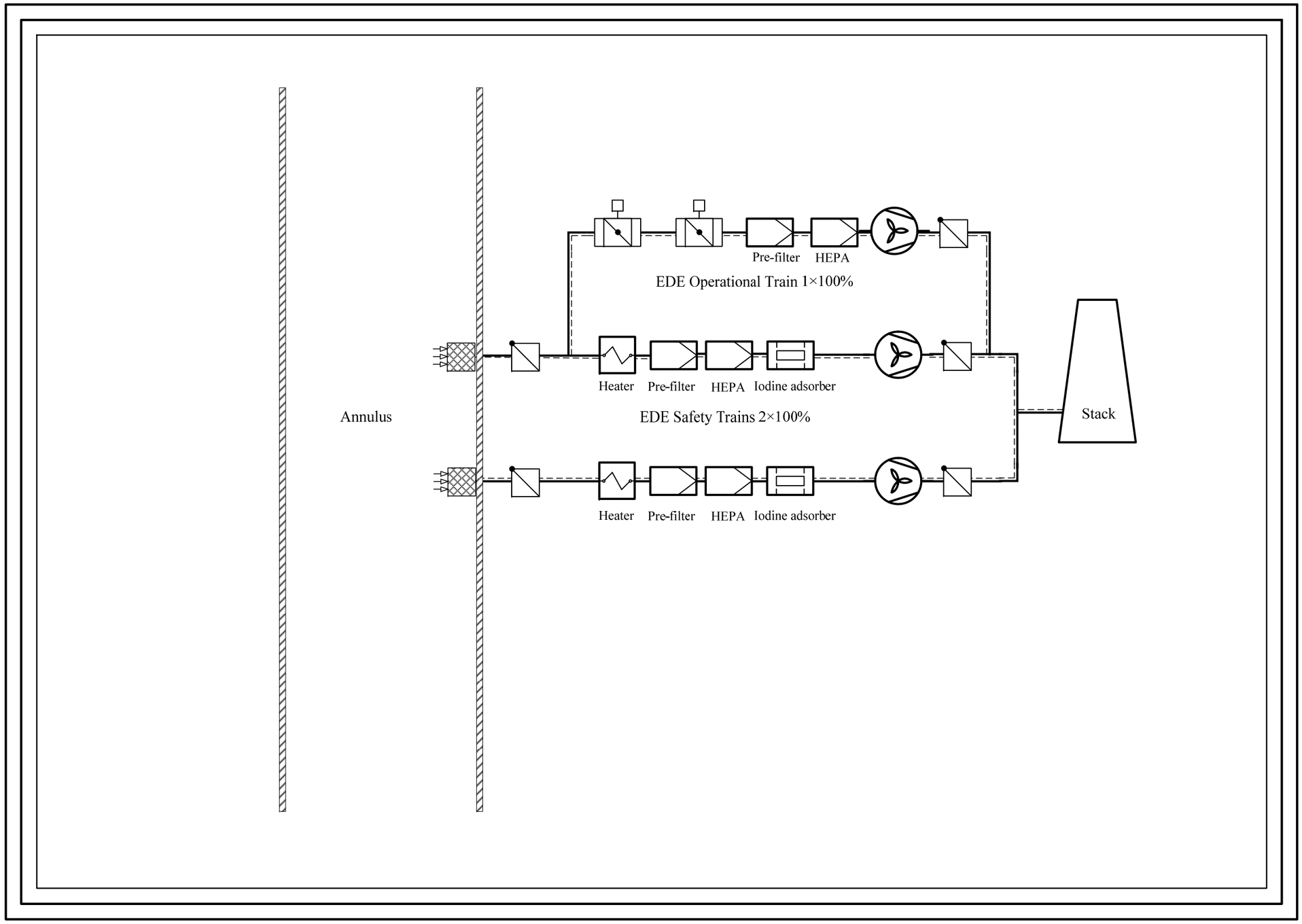

F-3A-5 EDE [AVS] Simplified Diagram

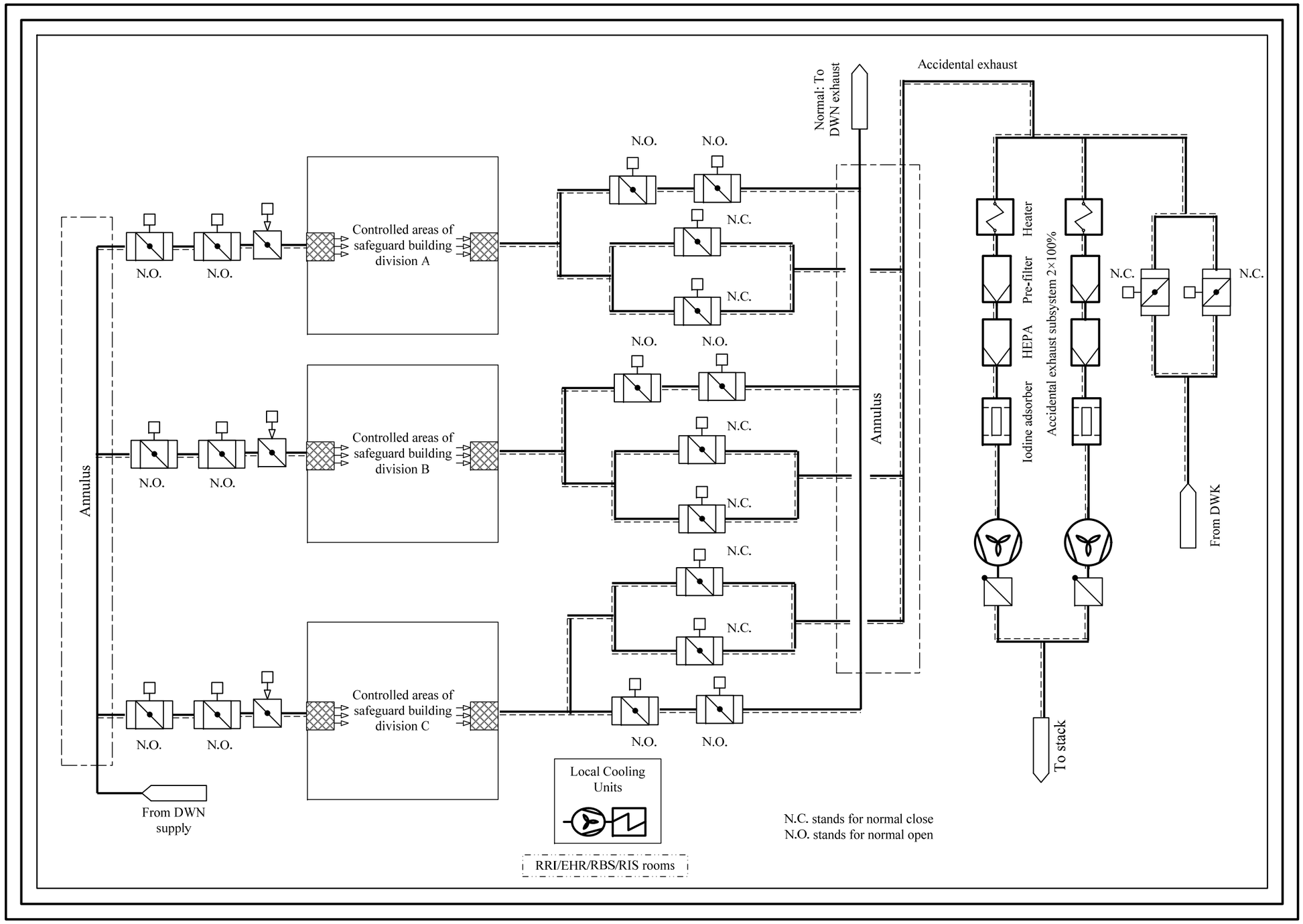

F-3A-6 DWL [SBCAVS] Simplified Diagram

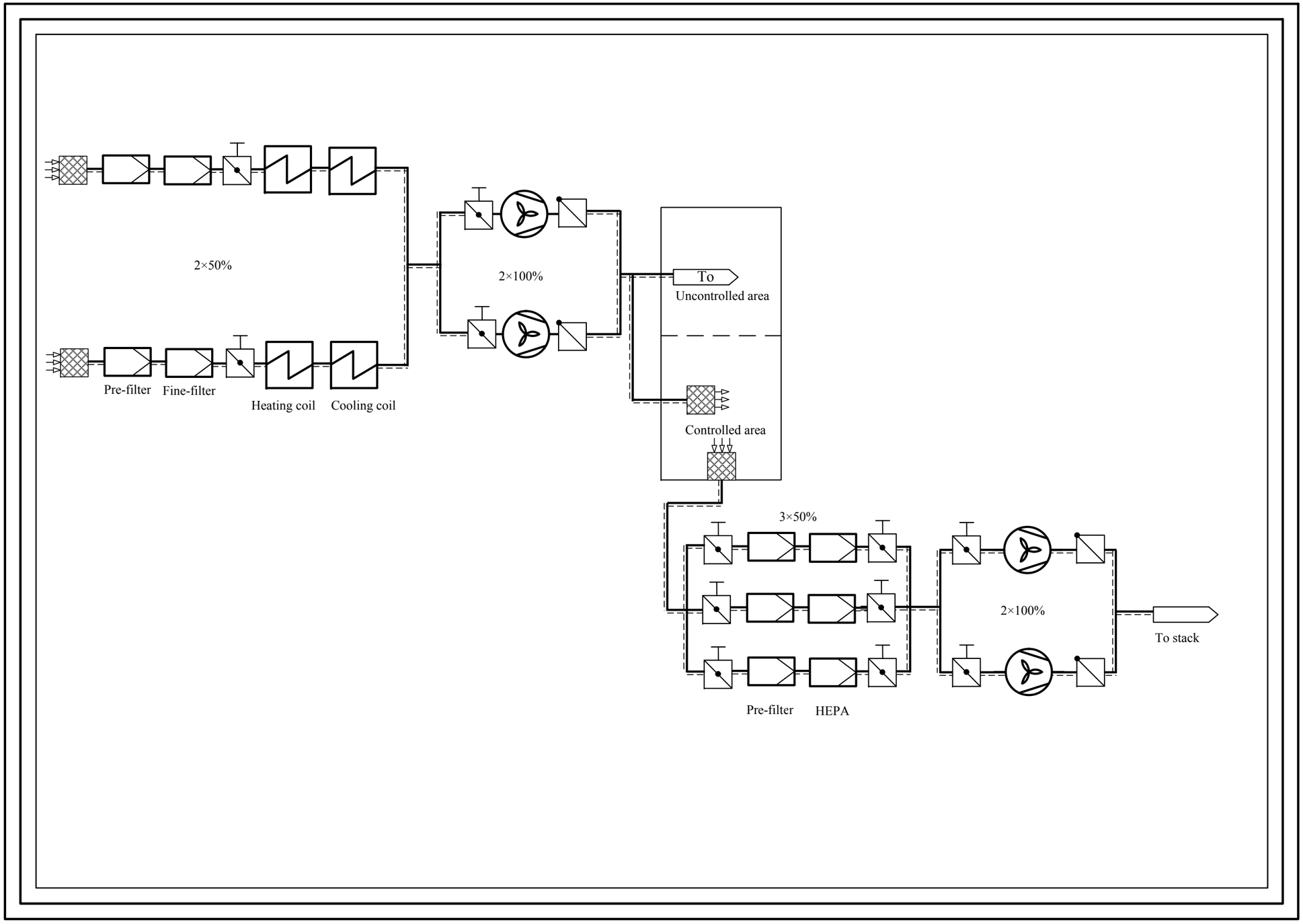

F-3A-7 DWW [ABCAVS] Simplified Diagram

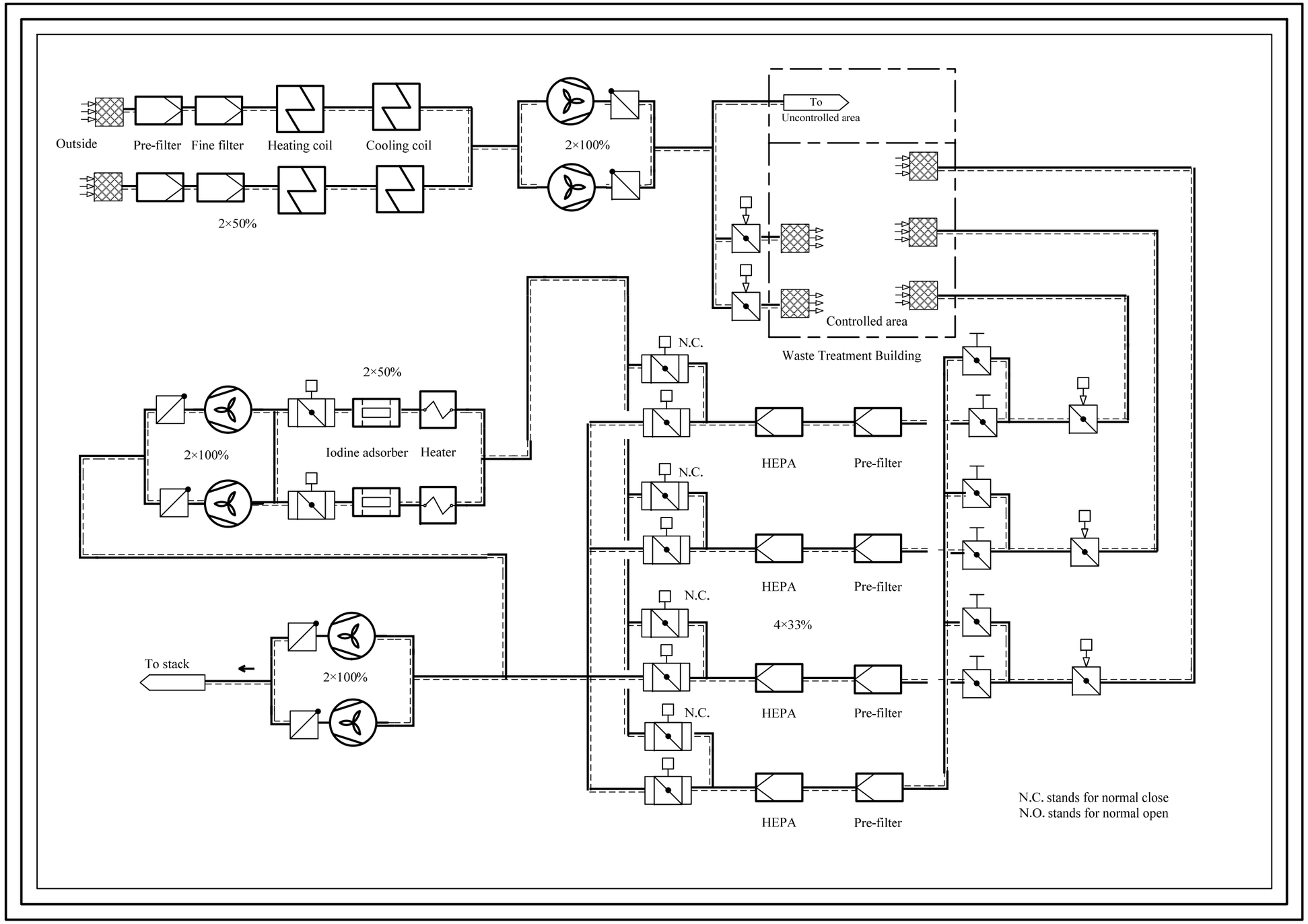

F-3A-8 DWQ [WTBVS] Simplified Diagram

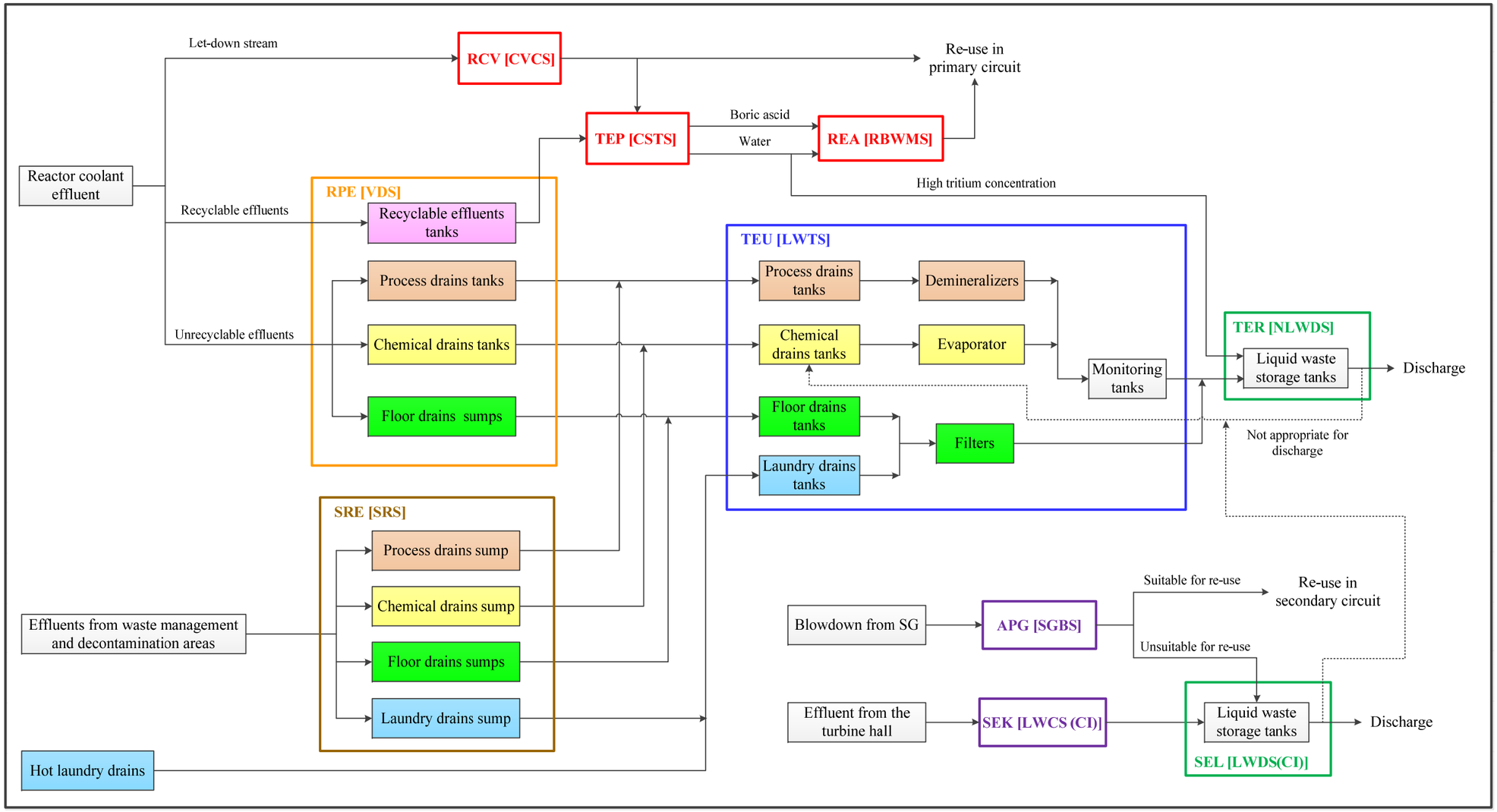

F-3A-9 Liquid Radioactive Waste Management Systems Flow Sheet

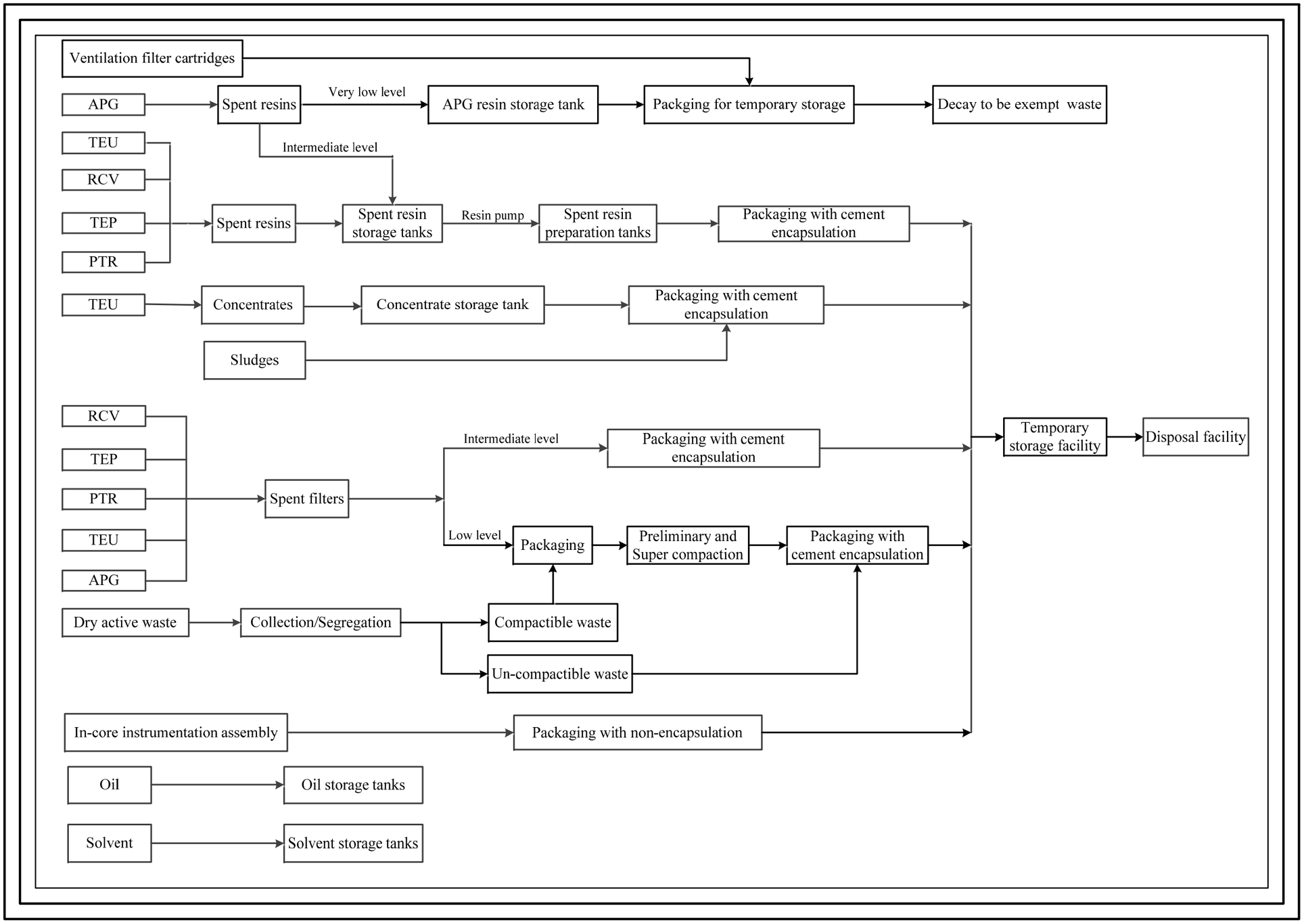

F-3A-10 Solid Radioactive Wastes Treatment Stream