Revision	Approved by	Number of Pages
000		122
Approval Date	06/10/2020	

General Nuclear System Ltd.

UK HPR1000 GDA Project

Document Reference:	**HPR/GDA/PCSRV1AR/0000**

Title:

Pre-Construction Safety Report V1

Amendment Report

For EA Public Consultation

This document has been prepared on behalf of General Nuclear System Limited with the support of China General Nuclear Power Corporation (CGN) and Électricité de France S.A. (EDF).

Although due care has been taken in compiling the content of this document, neither General Nuclear System Limited, CGN, EDF nor any of their respective affiliates accept any liability in respect to any errors, omissions or inaccuracies contained or referred to in it.

Text within this document that is enclosed within brackets '{…}' contains Sensitive Information and has been removed.

DISTRIBUTION LIST

Recipients	Cross Box
General Nuclear System Executive	☐
General Nuclear System all staff	☐
General Nuclear System and BRB all staff	☒
CGN	☒
EDF	☒
Regulators	☒
Public	☒

TABLE OF CONTENTS

1 List of Abbreviations and Acronyms

ALARP	As Low As Reasonably Practicable
BAT	Best Available Techniques
BRB	Bradwell B
CGN	China General Nuclear Power Group
DR	Design Reference
EA	Environment Agency (UK)
EDF S.A.	Electricité de France S.A.
HPR1000 (FCG3)	Hua-long Pressurised Reactor under construction at Fangchenggang nuclear power plant unit 3
GDA	Generic Design Assessment
GNSL	General Nuclear System Limited
GSR	Generic Security Report
IAEA	International Atomic Energy Agency
INSAG	International Nuclear Safety Advisory Group
iSoDA	interim Statement of Design Acceptability
JSCO	Joint Safety Case Office
MSQA	Management of Safety and Quality Assurance
NRW	Natural Resources of Wales (UK)
ONR	Office for Nuclear Regulation (UK)
PCER	Pre-Construction Environmental Report
PCSR	Pre-construction Safety Report
RP	Requesting Party
SFIS	Spent Fuel Interim Storage
SSER	Safety, Security and Environment Report
SSC	Structure, System and Component
SoDA	Statement of Design Acceptability
UK HPR1000	UK version of the Hua-long Pressurised Reactor

2 Introduction

The Generic Design Assessment (GDA) is the process undertaken jointly by the Office for Nuclear Regulation (ONR) and the Environment Agency (EA) to assess the safety, security and environmental implications of new nuclear power station designs. Natural Resources of Wales (NRW) may choose to participate in the GDA process, in which case any statement of design acceptability may be issued jointly by both EA and NRW and used to support site-specific applications in Wales.

GDA is a step-wise assessment process consisting of four ONR Steps and seven EA Elements as illustrated in F-2-1 below:

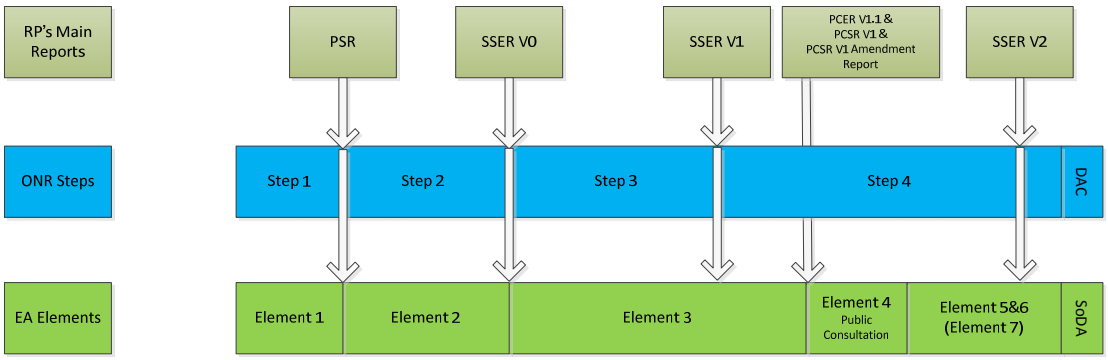

F-2-1 GDA process

During Element 3, the EA undertake a 'Detailed Assessment' of the UK version of the Hua-long Pressurised Reactor (UK HPR1000) proposal with a view to deciding whether a Statement of Design Acceptability (SoDA), or interim Statement of Design Acceptability (iSoDA) should be issued or not. Ahead of this decision, the EA is to publish its preliminary assessment reports, and a preliminary decision document. These will be made available to the public and the EA will undertake a public consultation on their findings, where feedback from the public is considered before determination of a final decision.

The UK HPR1000 Safety, Security and Environment Report (SSER) is produced to demonstrate that the design, construction, operation and decommissioning of the UK HPR1000 will be developed to reduce risk As Low As Reasonably Practicable (ALARP), and minimise, as low as is reasonably achievable, the impact on the public and the environment through the use of Best Available Techniques (BAT).

The UK HPR1000 SSER encompasses the Pre-Construction Environment Report (PCER), the Pre-Construction Safety Report (PCSR) and the Generic Security Report (GSR), and is supported by a number of important detailed supporting references.

The public version of the SSER is intended to provide adequate and meaningful information to ensure the public can understand the UK HRP1000 design, its safety , security and environmental implications.

Version 1 (V1) of the PCER and PCSR was published online on the General Nuclear

System Limited (GNSL) website at the entry into GDA Step 4 as per the programme outlined in F-2-1 above.

It was initially planned that SSER V1 would provide adequate information for EA Public Consultation. However, time constraints with several key work streams prevented this. In order to ensure that gaps identified with the environment case are addressed prior to public consultation, the Requesting Party (RP) have decided to update the SSER information relevant to UK HRP1000 design, its environmental implications and the environmental protections in place, ahead of the commencement of the EA Public Consultation. As such, the information provided can be fully up-to-date with the design and assessment work being undertaken within the GDA process. Therefore, PCER V1 has been updated to V1.1; specific sections in PCSR V1 chapters (see Section 4 for detail) which contain environment-relevant information have been amended and the amendments are presented in the present document (henceforth referred to as PCSR V1 Amendment Report).

The whole SSER will be updated to Version 2 at the end of the GDA process.

3 Purpose

The core submission relevant to UK HRP1000 environmental implications and the environmental protections in place is the PCER. It aims to demonstrate that the design, construction, operation and decommissioning of the UK HPR1000 will be developed to reduce, as low as is reasonably achievable, the impact on the public and the environment through the use of BAT. Some key environment related information is contained within the PCSR, such as descriptions of systems contributing to environment protection.

The entire PCER is being updated to V1.1 as part of the update of environment-related information, ahead of EA public consultation. There are some relevant sections of the PCSR where information needs to be changed or removed or where further information needs to be provided as part of this update. However, the scope of the amendment is limited to certain sections, of certain chapters as described in Section 4 below.

This document presents the amendments (i.e. changes, deletions and additions) to the PCSR V1 that are necessary to ensure adequate and meaningful information are provided and thus to facilitate the EA to carry out their detailed assessment and launch their public consultation. As such, the PCSR V1 remains valid except information changes made in this document.

4 Scope

This document details the amendments made to the PCSR V1 chapters that contain key environment related information. The PCSR chapters that require amendments are listed in T-4-1 below.

T-4-1 PCSR Chapters Amended in this Document

PCSR Chapter	Role and Purpose (Environment-related)
PCSR Chapter 10 Auxiliary Systems	Presents design information and engineering substantiation of the design of Auxiliary Systems for the UK HPR1000, including the Nuclear Auxiliary Systems, the Process Auxiliary Systems, the Heating, Ventilation and Air Conditioning Systems and the Diesel Generators.
PCSR Chapter 11 Steam and Power Conversion System	Presents design information of Circulating Water System of the UK HPR1000.
PCSR Chapter 21 Reactor Chemistry	Presents information on the proposed UK HPR1000 reactor chemistry.
PCSR Chapter 22 Radiation Protection	Presents information on the UK HPR1000 source term and direct dose rate to the public at the site boundary.
PCSR Chapter 23 Radioactive Waste Management	Provides information on the UK HPR1000 waste management systems design.
PCSR Chapter 24 Decommissioning	Presents the decommissioning strategy and plan, associated waste arising and its management proposal. It also presents how the design facilitates decommissioning.
PCSR Chapter 28 Pre-Construction Safety Report Chapter	Presents management of Spend Fuel and Non-Fuel Core Component in the spent fuel pool.
PCSR Chapter 29 Interim Storage of Spent Fuel	Presents the Spent Fuel Interim Storage (SFIS) strategy and the conceptual design of SFIS.

5 Structure of this Document

The structure of this document is intended to facilitate understanding of the amendments to the PCSR that are presented in this document, it consists of two parts:

a) Main Body

The main body text of this document is intended to explain the context, scope, purpose and the structure of this document. It also explains how amendments are presented and how they should be considered. It includes a summary of the development of the Design Reference (DR) and of the Management of Safety and Quality Assurance (MSQA) arrangements of the UK HPR1000 project relevant to environment.

The main body also sets out the plans of the RP to re-integrate the information for the final version of the SSER produced at the end of GDA, and how the updates made within this document will be incorporated to V2 of the PCSR.

b) Appendices

The appendices of this document contain the updates to the relevant sections of the PCSR V1, as determined by the finalised scope. Only the sub-sections relevant to the amendments are included, and where changes have been made compared to PCSR V1 these are clearly highlighted.

6 MSQA

A single approach to the MSQA arrangements has been put in place for the GDA project. This is described in the PCSR Chapter 20, Reference [1] and in PCER Chapter 1, Reference [2].

GNSL, China General Nuclear Power Group (CGN) and Electricité de France S.A. (EDF S.A.) MSQA arrangements are described in the PCSR Chapter 20, Reference [1].

This Section summarises development of MSQA arrangements relevant to environment since V1. It also covers the process via which the information presented in the present document will be reintegrated when the final version (V2) of the SSER is produced at the end of the GDA process. As these information are only temporary/intermediate information, it has been decided to include them in the main body of this document and not to present them as amendments to PCSR Chapter 20.

6.1 Requirements Management

The purpose of requirement management is to extract requirements and assumptions from safety case documentation and transfer them to the designers, future licensee and operators. The RP should define, capture, review, approve, and communicate to the designers, future licensee and operators, the requirements (and assumptions) used in the design and safety case of UK HPR1000 to ensure they are adequately addressed and managed. Requirements management for UK HPR1000 is developed based on the practice of its reference plant, i.e. HPR1000 (FCG3), with addition of UK context. Details of proposed requirement management for UK HPR1000 are described in Reference [3].

In terms of environment requirements for UK HPR1000 during GDA, focus is given to ensuring the proposed design complies with UK context/key environment principles and ensures adequate protection of the environment, and to providing sufficient flexibility/opportunity for a future operator to comply and adapt to the local context. When delaying a specific task/requirement to site licensing phase, consideration has also been given to the risk of significant challenges to the design from this task/requirement that would result in late significant/costly changes. The main reasons for this proposal are as following:

a) Environment requirements can differ a lot from a country to another as they are heavily influenced by the local environment (at the country and even site level) and only high level principles generally have a strong common basis and thus flexibility needs to be ensured in environment related processes and consideration

of the opportunity principle (i.e. making decisions at the time, with involvement of the right people) is key for environment;

b) For environmental objectives, limits/constraints and targets, due consideration is given to the local specificities (local environment, local waste disposal infrastructures, government policy/strategy for waste management, etc.);

c) Many System, Structure and Components (SSCs) relevant to environment (mainly non-radioactive SSCs) are excluded from the GDA scope. Only high level considerations and the potential environment impact assessment are considered during GDA for these SSCs; and,

d) Opportunity and flexibility are two key principles to be considered in environment areas during GDA to enable a future operator to adequately consider and comply with the local context.

The details for iterative design processes that integrate environment requirement management into the design can be found in sub-section 8.7 and Reference [3].

The procedure of *Requirement Management Provisions for UK HPR1000 Generic Design Assessment (GDA) Project* has been produced to define the whole process of GDA project requirements management, including requirements identification, requirements transfer, records of requirements delivery process, and corresponding requirements coding system requirements, Reference [4].

6.2 Transfer of Information to Future Licensee

Bradwell B (BRB) GenCo will act as the Design Authority and Intelligent Customer for the BRB GenCo project (and hence for the UK HPR1000 design being proposed for the BRB site). This organisational set up is aligned with the approach set out in the International Atomic Energy Agency (IAEA) International Nuclear Safety Advisory Group (INSAG)-19 report [5] and ONR's Technical Assessment Guide on Licensee Design Authority Capability, Reference [6]. Detailed information on BRB GenCo' responsibility and capability can be found in Reference [3]

A technical transition plan has been developed, outlining the process for transition from GNSL, as the UK entity responsible for managing the GDA project, to BRB GenCo for the site specific. The transition plan involves the transfer of people, knowledge and experience from GNSL to BRB to ensure that the GDA SSER and supporting references will be understood and transferred to BRB at the end of Step 4 of the GDA.

To support the transition to BRB, the GNSL to BRB Transition Plan sets out the tasks to be delivered within the following four work packages (WP1-WP4):

a) WP1 – Resources and people planning:

   1) To transfer required GNSL capability to BRB and contribute to BRB Design

Authority capability and capacity; and,

2) To ensure key knowledge retention for BRB from GNSL leavers.

b) WP2 – Technical planning:

1) To understand the development of UK HPR1000 safety, environment and security case and design through the GDA process for BRB to help develop the site-specific safety case, environment permits, security plans and plant design; and,

2) BRB GenCo to attend GNSL Modifications Committee and Technical Committee, in order to help the GDA project to take into account BRB comments to achieve a balanced site-specific design.

c) WP3 – Organisational planning

1) To use or receive the benefit of certain assets and contracts procured by (or entered into by) GNSL, in order for BRB to continue to refine the UK HPR1000 design for the site specific phase; and,

2) To put in place Intellectual Property and export control arrangements for enabling BRB documentation request to GDA.

d) WP4 – Communication and stakeholder engagement planning:

1) To ensure timely and effective communications with external and internal stakeholders; and,

2) To go through the appropriate GNSL and BRB GenCo internal governance arrangements.

To ensure an effective transition from GDA to site specific phase, the Joint Safety Case Office (JSCO), is in the process of being set up as collaboration between GNSL and BRB GenCo. The purpose of the JSCO is to achieve full alignment and consistency between the GDA and site-specific safety case, environmental permits, and security plans, without changing the current GNSL and BRB GenCo governance and safety, environment and security development processes.

The transition process will ensure that there is a smooth transition of information from the GDA project to BRB GenCo, and confirms the intent for all documentation to be issued to BRB as necessary.

Finally, the transition plan ensures that there will be a transfer of people and knowledge from GNSL to BRB GenCo, ensuring that the Intelligent Customer activities to be undertaken by BRB GenCo, as per the INSAG-19 model, are informed, or undertaken, by personnel who have a thorough understanding of the GDA design and safety, environment and security case.

Similar process would be followed in the circumstance the UK HPR1000 was to be

built at another site as well as at Bradwell.

6.3 Reintegration of the Safety & Environment Cases

At the end of the GDA process, SSER V2 will be issued ahead of the final regulatory decision on the GDA (F-2-1 in Section 2), to support this decision. Where sections of the PCSR have been amended in the appendices of this document, these sections will be used as one important input for the V2 version of the concerned chapters (T-4-1 in Section 4). This will ensure that the updates captured in this document are incorporated into PCSR V2, together with all other relevant updates, e.g. those that might arise from additional Step 4 work undertaken by the RP, from the public consultation and from ONR/EA assessment of the RP's submissions.

When V2 of the SSER is issued, this document will have been superseded and will be withdrawn, and replaced by SSER V2, published online at the end of GDA.

7 Design Reference Utilised for the Interim Version of the Environment Case

7.1 Design Reference Configuration Management

Through the course of the GDA project, design modifications will be made and following a series of design reviews that ensure the design requirements are met and fulfil the design intent, the DR will be updated accordingly and shall align with the safety documentation, Reference [7]. This is to ensure the latest available design information can be referenced by major GDA submissions, and as such, the revised reference will need to be in place at a time that allows the submission(s) being supported to address the implications of the revised design.

In UK HPR1000 GDA project, DR is gradually frozen into DR1, DR2, and DR3 points at the end of Step 2, 3 and 4 of the GDA project. Between two design freezes, different internal state control points can be set according to progress of the design work. The details are presented in *UK HPR1000 Design Control Strategy*, Reference [8]. The latest DR used as the basis of SSER V1 is presented in *UK HPR1000 Design Reference Report*, Reference [9]. The links between the SSER and the DR are illustrated in F-7-1.

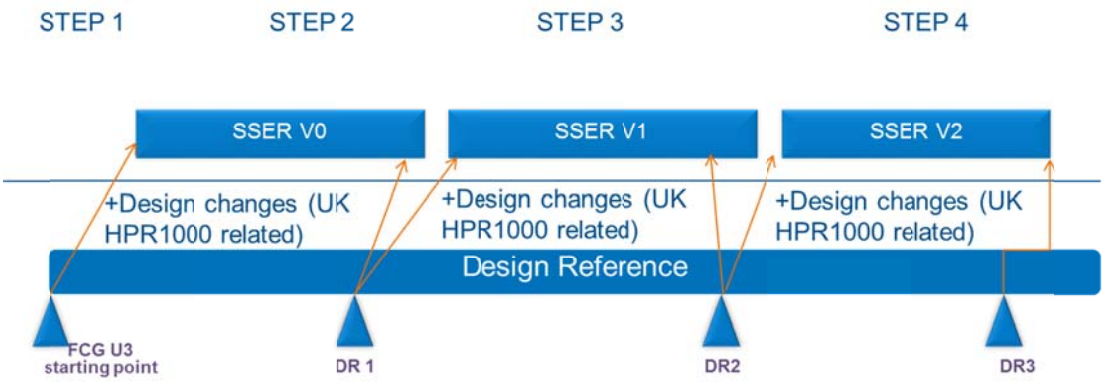

F-7-1 Relationship between GDA Submissions and Design Reference Revisions

7.2 DR for Environment Case V1.1

As explained in the Section 2, the SSER information relevant to UK HRP1000 design, its environmental implications and the environmental protections in place, is updated ahead of the commencement of the EA Public Consultation, to provide meaningful information for EA's detailed assessment. Therefore, this document and PCER V1.1 are based on an interim DR.

SSER V1 is developed based on DR2.1, Reference [9]. Since then, further modifications to the design have been identified as a result of the on-going design and analysis process to reduce risks to ALARP and minimise environmental impact by application of BAT. All proposed modifications for UK HPR1000 are required to be assessed by the RP for potential environmental impact and/or impact to the environment case documentation as part of the modification categorisation and control procedures, Reference [10] and [11].

As specified in Reference [12], the additional modifications since DR2.1 have been assessed for environmental impact and considered within PCER V1.1, PCSR V1 Amendment Report and the supporting references where applicable. Many of the modifications have an insignificant or zero environmental impact. Therefore, they are not explicitly referenced within PCSR V1 Amendment Report (and PCER V1.1). The DR basis for the PCSR V1 Amendment report (and PCER V1.1) is therefore DR2.1 plus the list of modifications presented in T-7-1 below. This list of modifications is the working basis for the planned DR2.2 which will be issued in late 2020. This means that PCSR V1 Amendment report (and PCER V1.1) is expected to be broadly consistent with DR2.2 with little further change anticipated to the list of proposed modifications in T-7-1 prior to the intended issue of DR2.2.

T-7-1 List of Proposed Modifications for DR2.2 that have been Considered in PCSR V1 Amendment Report and PCER V1.1

No.	Modification No.	Modification Name	Topic Area
1	M23	*Modification of Resisting the Extremely Low Air Temperature of the UK on the ASP [SPHRS]*	External Hazards
2	M24	*Modification of Voltage Level of SBO DG and Associated Switchboard*	Electrical Engineering
3	M25	*Modification of Anti-freezing of Mechanical Draught Cooling Tower on ECS [ECS]*	External Hazards
4	M26	*Modification about the escape route from BPX*	Conventional Fire Safety

No.	Modification No.	Modification Name	Topic Area
5	M27	*Modification of Structural Design Due to Increased Aircraft Impact Load Input*	Civil Engineering
6	M28	*Modification of ARE [MFFCS] and VVP overpressure relief opening at +20.80m in BSB/BSA buildings*	External Hazards
7	M29	*Modification about the evacuation designs of the inner-inner rooms in the BFX*	Conventional Fire Safety
8	M30	*Modification of diverse Component Interface Module (CIM)*	Instrumentation and Control
9	M31	*Modification of zinc injection*	Chemistry
10	M32	*Modification on ASP [SPHRS] Makeup to the SFP*	Fault Study
11	M33	*Modification of the escape route in BNX*	Conventional Fire Safety
12	M34	*Mechanical Diversification on Isolation Valves at the suction of the PTR [FPCTS] Cooling Trains*	Fault Study
13	M35	*HVAC systems diversity modification (DEL/DVL/DCL/DWL/DWK/DVD)*	Mechanical Engineering
14	M36	*Modification about the escape route from BEJ*	Conventional Fire Safety
15	M37	*Diversity Improvement for parameters delivering the functions in frequent faults*	Instrumentation and Control
16	M38	*Modification of electrical power system classification*	Electrical Engineering
17	M39	*Modification of the escape staircase exits in the BWX*	Conventional Fire Safety
18	M40	*Modification of the Staircase arrangements in the BWX*	Conventional Fire Safety
19	M41	*Modification of the inner-inner room in the BWX*	Conventional Fire Safety
20	M42	*Modification for FTT SI Classification and Structure of FTT*	Structural Integrity
21	M43	*Electrical power system power distribution modification*	Electrical Engineering

No.	Modification No.	Modification Name	Topic Area
22	M44	*Mechanical Diversification on Containment Isolation Valves*	Fault Study
23	M45	*Modification of Fire-fighting Water system for Nuclear Island (JPI [FWSNI]) due to internal flooding risk in the Main Control Room (MCR)*	Internal Hazard
24	M46	*Modification of Fuel Pool Hall Access Ladder for Crane Maintenance*	Conventional Safety
25	M47	*Modification for MSL RCC-M class*	Structural Integrity
26	M48	*Modification of touch screen of SCID-200 on FirmSys in F-SC1 classic*	Instrumentation and Control
27	M49	*Modification about RPV closure head adopting integrated head forging*	Structural Integrity
28	M50	*Modification about PZR lower head*	Structural Integrity
29	M51	*Design modification of HIC welds inspectability related to Main Coolant Lines and Main Steam Lines*	Structural Integrity
30	M52	*Design modification of typical cranes classification*	Mechanical Engineering
31	M53	*Modification for the connection structure of Pressuriser heads and shells*	Structural Integrity
32	M54	*Modification of APG drainage pipeline*	Mechanical Engineering
33	M55	*Design modification of Non-HIC Welds Inspectability Related to Main Feedwater nozzle and Main Steam Lines*	Structural Integrity
34	M56	*LOOP Event Mitigation Measure Improvement*	Fault Study
35	M57	*Insulation material replacement in containment*	Mechanical Engineering
36	M58	*Re-classification of SPND sub-system*	Fuel & Core

No.	Modification No.	Modification Name	Topic Area
37	M59	*Modification the lower operating window limit and expected value of the hydrogen concentration in reactor coolant*	Chemistry
38	M60	*Modification of Common Raft Foundation Thickness*	Civil Engineering
39	M61	*Replacement of "pressuriser pressure low 3" in KDS by "hot leg pressure low 3 (draft name)"*	Fault Study
40	M62	*Improvement the isolation design and drainage design*	Mechanical Engineering
41	M63	*Modification due to IVR operation limitation in LM-LOCA accident*	Human Factor
42	M64	*Modification of Isolation of the water intake pipeline of the RCV charging pump from VCT and hydrogenation station manually*	Human Factor
43	M65	*Modification of Injection of MHSI with large miniflow line closed manually*	Human Factor
44	M66	*Design Modification of Spent Fuel Delivery Process*	Mechanical Engineering
45	M67	*Modification of Implementation Platform for ATWS due to failure of RCCA to insert (State A)*	Instrumentation and Control
46	M68	*Modification spurious dilution caused by the LHSI pump seal cooling heat exchanger break*	Fault Study
47	M69	*Mechanical Diversification on RCV and ASP Isolation Valves*	Fault Study
48	M70	*Design modification to prevent the fire damage from beyond design basis aircraft crash*	External hazards
49	M71	*Modification of MSL (inside safeguard building) RCC-M class*	Structural Integrity
50	M72	*Design modification of Letdown Nozzle and Pressuriser Spray Nozzle related to Main Coolant Lines*	Structural Integrity

8 How to Read this Document

As previously explained, this document presents the amendments necessary to some parts of the PCSR V1. There are four possible types of amendments:

a) Changes to existing information: some information in PCSR V1 that is relevant to the environment case may need to be changed because the design has been modified or because the information needs to be changed to reflect the outcomes of the safety/environmental assessment of the design within the UK context;

b) Deletions of information: some information in PCSR V1 that is relevant to the environment case may need to be deleted as they are not relevant anymore, e.g. since the design has changed or the complementary work performed has invalidated the information;

c) Additions of information: some information relevant to the environment case is missing in PCSR V1, e.g. due to it not having been available during PCSR V1 production.

d) Additions of references: the identification number of reference remains the same provided that it is the same reference as in the PCSR V1 or revised; if a brand-new reference is produced in each appendix, new reference identification numbering is introduced pertinent to each appendix to help distinguish them from the original references in the PCSR V1.

The appendices of this document present the amendments, as defined above, made to V1 of PCSR chapters listed in T-4-1 in section 4, with one appendix produced per chapter. These appendices only present the sections where information is amended; the sections where no amendment is made are not repeated in the appendices. Consequently, the appendices should be read together with the V1 of the relevant PCSR chapters and with the PCER V1.1 to understand the full demonstration that the design, construction, operation and decommissioning of the UK HPR1000 will be developed to reduce, as low as is reasonably achievable, the impact on the public and the environment through the use of BAT.

The amendments are clearly presented in the appendices with an example as follows:

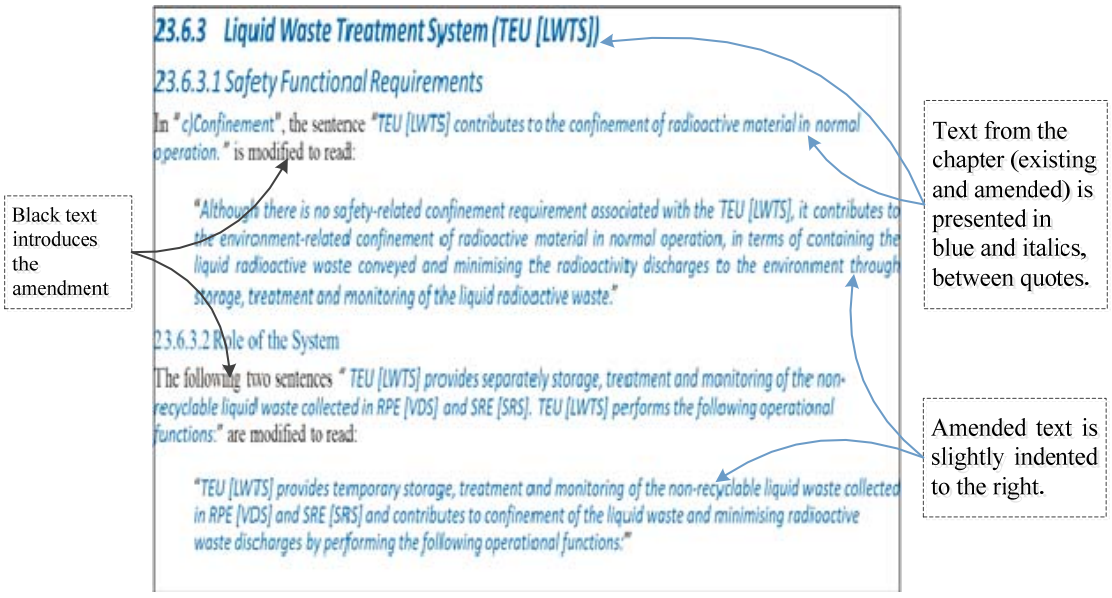

F-8-1 Example of the Form of Amendment

9 References

[1] General Nuclear System Limited, Pre-Construction Safety Report Chapter 20 MSQA and Safety Case Management, HPR/GDA/PCSR/0020, Revision 001, December 2019.

[2] General Nuclear System Limited, Pre-Construction Environmental Report Chapter 1 Introduction, HPR/GDA/PCER/0001, Revision 001-1, December 2019.

[3] CGN, Requirement Management Summary Report, GHX00100127DOZJ03GN, Rev B, September 2020.

[4] CGN, Requirement Management Provisions for UK HPR1000 Generic Design Assessment (GDA) Project, GH-40M-026, Rev A, September 2020.

[5] IAEA, Maintaining the Design Integrity of Nuclear Installations throughout their Operating Life, INSAG-19, A report by the International Nuclear Safety Advisory Group, 2003.

[6] ONR, Licensee Design Authority Capability, NS-TAST-GD-079, Revision 6, 2020.

[7] General Nuclear System Limited, Design Reference Configuration Management Procedure, HPR/GDA/PROC/0054, Revision 0, 2019.

[8] General Nuclear System Limited, UK HPR1000 Design Control Strategy, HPR/GDA/REPO/0006, Revision 1, 2019.

[9] CGN, UK HPR1000 Design Reference Report, NE15BW-X-GL-0000-000047, Rev E, December 2019.

[10] General Nuclear System Limited, UK HPR1000 Modification Categorisation Procedure, HPR/GDA/PROC/0033, Revision 1, 2020.

[11] General Nuclear System Limited, UK HPR1000 Modification Control Procedure, HPR/GDA/PROC/0053, Revision 3, 2020.

[12] CGN, Provisions on Configuration Change Management for UK HPR1000 Generic Design Assessment (GDA) Project, GH-40M-012, Rev E, June 2020.

10 Appendices

Appendix No.	Amended PCSR Chapter	Pages Range
Appendix A	PCSR Chapter 10 Auxiliary Systems	A-1~13
Appendix B	PCSR Chapter 11 Steam and Power Conversion System	B-1~2
Appendix C	PCSR Chapter 21 Reactor Chemistry	C-1~21
Appendix D	PCSR Chapter 22 Radiological Protection	D-1~16
Appendix E	PCSR Chapter 23 Radioactive Waste Management	E-1~31
Appendix F	PCSR Chapter 24 Decommissioning	F-1~6
Appendix G	PCSR Chapter 28 Fuel Route and Storage	G-1~3
Appendix H	PCSR Chapter 29 Interim Storage of Spent Fuel	H-1~11

Appendix A – Amendments to PCSR Chapter 10 – Auxiliary Systems

AMENDED CONTENT

10.1 List of Abbreviations and Acronyms

ALARP	*As Low As Reasonably Practicable*
CGN	*China General Nuclear Power Corporation*
HEPA	*High Efficiency Particulate Air*
HVAC	*Heating, Ventilation and Air Conditioning*
IRWST	*In-Containment Refuelling Water Storage Tank*
OPEX	*Operating Experience*
PCSR	*Pre-Construction Safety Report*
PTR	*Fuel Pool Cooling and Treatment System [FPCTS]*
RCP	*Reactor Coolant System [RCS]*
RCV	*Chemical and Volume Control System [CVCS]*
REA	*Reactor Boron and Water Makeup System [RBWMS]*
REN	*Nuclear Sampling System [NSS]*
RGP	*Relevant Good Practice*
SED	*NI Demineralised Water Distribution System [DWDS (NI)]*
SFP	*Spent Fuel Pool*
TEG	*Gaseous Waste Treatment System [GWTS]*
TEP	*Coolant Storage and Treatment System [CSTS]*
TER	*Nuclear Island Liquid Waste Discharge System [NLWDS]*
TES	*Solid Waste Treatment System [SWTS]*
UK HPR1000	*UK version of the Hua-long Pressurised Reactor*
VCT	*Volume Control Tank*

System codes (XXX) and system abbreviations (YYY) are provided for completeness in the format (XXX [YYY]), e.g. Chemical and Volume Control System (RCV [CVCS]).

10.2 Introduction

10.2.4 General Design Requirements

The paragraph "*The design requirements derived from Chapters 4, 15, 18, 19, 30, 31… principles is presented in supplementary submissions, References [1], [2], [3].*" is

modified to read:

"*The design requirements derived from PCSR chapters and other relevant documents providing general requirements are listed below. The requirements for system design which shall be considered in the system design process are also listed. These requirements for system design have taken into account the considerations of nuclear safety, conventional safety, environmental protection, etc. Detailed description of requirements and principles is presented in supplementary submissions, References [1], [2], [3] and PCSR Chapters 4, 15, 18, 19, 23, 24, 30, 31.*"

The bullet point "*g) Decommissioning*" is modified to read:

"*Decommissioning shall be considered during the design stage for the UK HPR1000. At the current stage, the general considerations of decommissioning are presented in Reference [A-1] and mainly include:*

1) *The consideration of facilitating decommissioning;*
2) *The consideration of decommissioning strategy; and,*
3) *The consideration of the preliminary decommissioning plan for the UK HPR1000.*

The design facilitating decommissioning will be considered during the design of the auxiliary systems, the relevant considerations are provided in [A-2]."

In the bullet point "*n) Radioactive Waste Minimisation*", the paragraph "*Detailed substantiation analysis related to the auxiliary systems design is presented in the relevant ALARP demonstration report of PCSR Chapter 23.*" is modified to read:

"*Detailed substantiation analysis related to the auxiliary systems design is presented in the Topic Report on Radioactive Waste Minimisation for Mechanical Engineering, Reference [A-3].*"

After the bullet point "*n) Radioactive Waste Minimisation;*", the following text is added.

"*The considerations of system design mainly include the system functional requirements, the requirements derived from various areas and the characteristics of the system. The system functional requirements concerns about the reactivity control, the heat removal and the confinement of radioactive materials during normal and accidental conditions. The requirements from other areas concerns about reactor chemistry, waste minimization, decommissioning, human factors, radiological protection, etc. And the characteristics of the system concern the media transported in the system, the chemicals added in the systems, the radioactivity confined in the systems, etc. Among the considerations and requirements above, environment protection has been considered along with the nuclear safety.*"

10.4 Nuclear Auxiliary Systems

10.4.3 Chemical and Volume Control System (RCV [CVCS])

10.4.3.1 System Description and Operation

10.4.3.1.1 System Description

a) General System Description

In bullet point "*8) Zinc Injection Unit*", the following sentence "*Zinc injection is adopted in the design of UK HPR1000 as a design modification, which will be finished in step 4. This information will therefore be supplemented in step 4.*" is modified to read:

> "*The zinc injection unit consists of a zinc injection pump and a zinc injection tank. Zinc acetate is continuously injected into the reactor coolant through the zinc injection unit, with the objective of reducing worker dose and material corrosion.*"

b) Description of Main Equipment

In bullet point "*6) Volume Control Tank*", the following sentence "*The VCT is a vertical cylindrical vessel which is used to compensate for volume fluctuations of the reactor coolant in different operational conditions in conjunction with the REA [RBWMS] and TEP [CSTS]. The TEG [GWTS] purges the gaseous phase space in the upper part of the VCT continuously to prevent hydrogen accumulation. Detailed information is presented in Table T-10.4 5.*" is modified to read:

> "*The VCT is a vertical cylindrical vessel which is used to compensate for volume fluctuations of the reactor coolant in different operational conditions in conjunction with the REA [RBWMS] and the TEP [CSTS] systems. The TEG [GWTS] purges continuously the gaseous phase space in the upper part of the VCT with nitrogen to prevent hydrogen accumulation. Detailed information is presented in Table T-10.4 5.*"

d) Description of System Interfaces

After paragraph "*4) (TEG [GWTS]).*", the following paragraph is added.

> "*5) Solid Waste Treatment System (TES [SWTS])*
>
> *The TES [SWTS] collects the spent resins from the demineralisers in the spent resin storage tank, and replaces the spent filter cartridges via remote replacing mechanism.*"

e) Description of Instrumentation and Control

The following sentence "*Instrumentation is designed to monitor and control the main parameters of the RCV [CVCS]. The main parameters include temperature, pressure, flow, water level, hydrogen concentration and radioactivity.*" is modified to read:

> "*Instrumentation is designed to monitor and control the main parameters of the RCV*

[CVCS]. The main parameters include temperature, pressure, pressure difference, flowrate, water level, hydrogen concentration and radioactivity levels, etc."

10.4.3.1.2 System Operation

a) Plant Normal Conditions

2) Normal Power Operation

In the first paragraph, the sentences "*One coolant filter, one mixed bed demineraliser and one resin trap filter are in operation. If needed, a cation-bed demineraliser can be put into intermittent operation as necessary to remove excess lithium, caesium, molybdenum and ytterbium in the reactor coolant.*" are modified to read:

"*One coolant filter, one mixed bed demineraliser and one resin trap filter are in operation. If needed, a cation-bed demineraliser can be put into intermittent operation as necessary to remove excess lithium and radioactive cations from the reactor coolant.*"

In the third paragraph, after sentence "*During normal operation, ^{7}LiOH can be injected into the reactor coolant upstream of the charging pump by chemical injection pump as needed for pH control.*", the following text is added:

"*Zinc acetate can be continuously injected into the reactor coolant upstream of the charging pump by zinc injection pump. Zinc injection can reduce the corrosion of the materials and the worker dose.*"

10.4.3.5 Preliminary Design Substantiation

10.4.3.5.2 Compliance with Design Requirements

b) Engineering Design Requirements

1) Reliability Design of SSCs

In the bullet point "*- Diversity*", the paragraph "*The design of the containment isolation valves in the system is compliant with the diversity principles. The internal containment isolation valves and the external containment isolation valves installed at the letdown line and seal leak-off line are designed and supplied by different manufacturers; the internal containment isolation valves are designed as a check valve, while the external containment isolation valves are designed as a shut-off valve.*" is modified to read:

"*The design of the containment isolation valves in the system is compliant with the diversity principles. The internal containment isolation valves and the external containment isolation valves installed at the letdown line are designed with different types of valves: the internal containment isolation valve is a globe valve while the external containment isolation valve is a gate valve.*"

10.4.5 Coolant Storage and Treatment System (TEP [CSTS])

10.4.5.1 Safety Functional Requirements

10.4.5.1.1 Confinement

The paragraph "*The TEP [CSTS] contributes to achieve confinement of radioactive waste in normal operation.*" is modified to read:

> "*The TEP [CSTS] contributes to confinement of radioactive waste in normal operation, in terms of carrying liquid / gaseous fluids containing radioactive material and minimising the radioactivity discharges to the environment through storage and treatment of liquid / gaseous radioactive waste.*"

10.4.5.4 System Description and Operation

10.4.5.4.1 System Description

e) Description of Instrumentation and Control

After sentence "*The normal operation of the TEP system is automatic*", the following text is added:

> "*(evaporator distillates transfer to TER [NLWDS] requires manual confirmation by the operator).*"

10.4.5.4.2 System Operation

a) Plant Normal Conditions

In the bullet point "*2) Coolant Purification Sub-system (TEP [CSTS] 2)*", the paragraph "*TEP [CSTS] 2 transfers coolant from TEP [CSTS] 1 to TEP [CSTS] 3, 5 and 6. The coolant is demineralised and filtered by the demineraliser of TEP [CSTS] 2. The mixed bed demineraliser is filled with H^+ and OH^- ions, to remove residual lithium and caesium, while other isotope ions will not be removed by the demineraliser of the RCV [CVCS].*" is modified to read:

> "*TEP [CSTS] 2 transfers coolant from TEP [CSTS] 1 to TEP [CSTS] 3, 5 and 6. The coolant is demineralised and filtered by the TEP [CSTS] 2. The mixed bed demineraliser is filled with H^+ and OH^- ions, to remove radioactive ions, which are not removed by the demineraliser of the RCV [CVCS].*"

10.4.6 Nuclear Sampling System (REN [NSS])

In the first paragraph, the sentence "*REN [NSS] mainly enables centralised analysis and determination of the chemical and radio-chemical characteristics of samples taken from the RCP [RCS], secondary side of the SGs, nuclear auxiliary systems and liquid waste and gaseous waste treatment system.*" is modified to read:

> "*REN [NSS] mainly enables centralised analysis and determination of the chemical*

and radio-chemical characteristics of samples taken from the RCP [RCS], secondary side of the SGs, nuclear auxiliary systems and Gaseous Waste Treatment System (TEG [GWTS])."

10.4.6.5 Preliminary Design Substantiation

10.4.6.5.1 Compliance with Design Requirements

b) Engineering Design Requirements

1) Reliability Design of SSCs

In the bullet point "*- Diversity*", the paragraph "*The containment isolation valves design in the system is compliant with the diversity principles. Two redundant containment isolation valves installed in the same line are supplied by two different suppliers.*" is modified to read:

"*The containment isolation valves design in the system is compliant with the diversity principles. The internal containment isolation valves and the external containment isolation valves installed at the containment sampling return line are designed with different types of valves: the internal containment isolation valve is a ball valve, while the external containment isolation valve is a globe valve.*

For the containment atmosphere sampling lines and the sampling lines of safety injection system RIS [SIS] accumulators, the internal and external containment isolation valves adopt the mechanical component diversification."

10.4.7 Fuel Pool Cooling and Treatment System (PTR [FPCTS])

10.4.7.1 System Description and Operation

10.4.7.1.1 System Description

d) Description of System Interfaces

After the paragraph starts with "*The SED [DWDS (NI)] provides…….*", the following paragraphs are added.

"*10) TER [NLWDS]*

The TER [NLWDS] is required to collect water from the IRWST in case of contamination.

11) TES [SWTS]

The TES [SWTS] is required to provide the treatment of spent resins from the demineralisers."

10.4.7.1.2 System Operation

a) Plant Normal Conditions

4) Purification and Skimming of the BRX Pools

In bullet point "*4) Purification and Skimming of the BRX Pools*", the first sentence "*During power operation, the reactor pool purification filter can be backed up by the SFP purification filter.*" is modified to read:

> "*During power operation, the SFP purification filter can be backed up by the reactor pool purification filter.*"

10.4.7.5 Preliminary Design Substantiation

10.4.7.5.1 Compliance with Design Requirements

b) Engineering Design Requirements

1) Reliability Design of SSCs

In the bullet point "*- Diversity*", after the paragraph "*The three cooling trains are supplied by EDGs. Cooling trains A and B are also supplied by SBO diesel generators.*", the following paragraph is added:

> "*The isolation valves on the cooling chains in the system are designed to be compliant with the diversity principles. The two isolation valves installed on the same cooling line are designed with different types of valves: one of the isolation valves is a gate valve, while the other isolation valve is a butterfly valve.*"

10.4.8 Component Cooling Water System (RRI [CCWS])

10.4.8.5 Preliminary Design Substantiation

10.4.8.5.1 Compliance with Design Requirements

b) Engineering Design Requirements

1) Reliability Design of SSCs

In the bullet point "*- Diversity*", after the paragraph "*The break of heat exchangers can be detected by different signals (pressure, temperature, level, etc.).*", the following paragraph is added:

> "*The design of the containment isolation valves in the system is compliant with the diversity principles. The internal containment isolation valves and the external containment isolation valves installed at the train A for EVR [CCVS] cooling return line and the train B for EVR [CCVS] / RPE [VDS] cooling return line are designed with different types of valves: the internal containment isolation valves are gate valves, while the external containment isolation valves are globe valves.*"

10.4.10 ALARP Assessment

10.4.10.1 Review of Design against RGP & OPEX

The paragraph "*The OPEX from multiple reactors has shown that the primary circuit zinc injection technology has the effect…*" is modified to read:

> "*The primary circuit zinc injection technology is regarded as RGP, with regard to its effect on reduction of worker dose rate and of corrosion of main component material in the primary circuit. After optioneering, zinc injection is decided to be implemented in the UK HPR1000. The design modification is carried out and the related RCV [CVCS] system design is modified.*"

10.4.13 Simplified Diagrams

In the diagram "*F-10.4-1 Simplified Diagram of the RCV [CVCS]*", *the zinc injection unit* is added as follows:

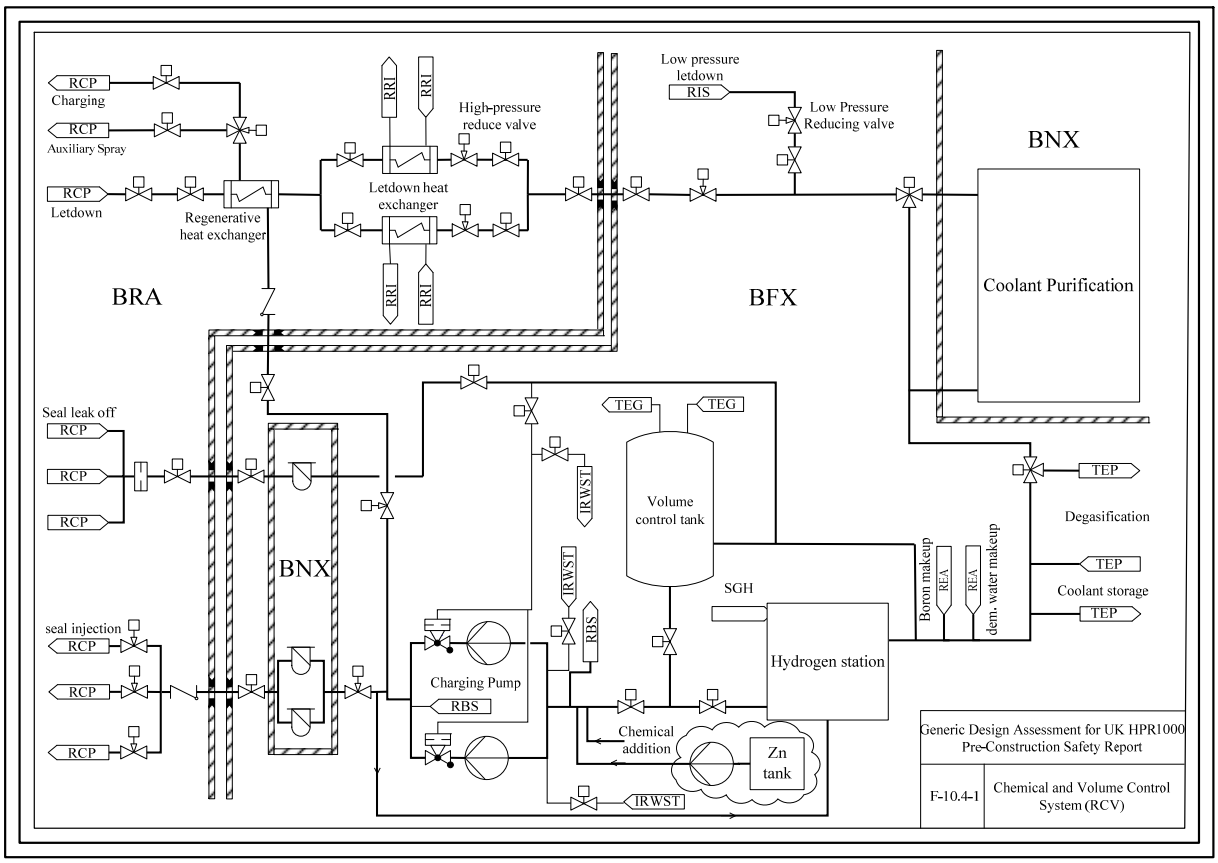

F-10.4-1 Simplified Diagram of the RCV [CVCS]

In the diagram "*F-10.4-3 Simplified Diagram of the TEP [CSTS]*", the interface with TER and SED is added as follows:

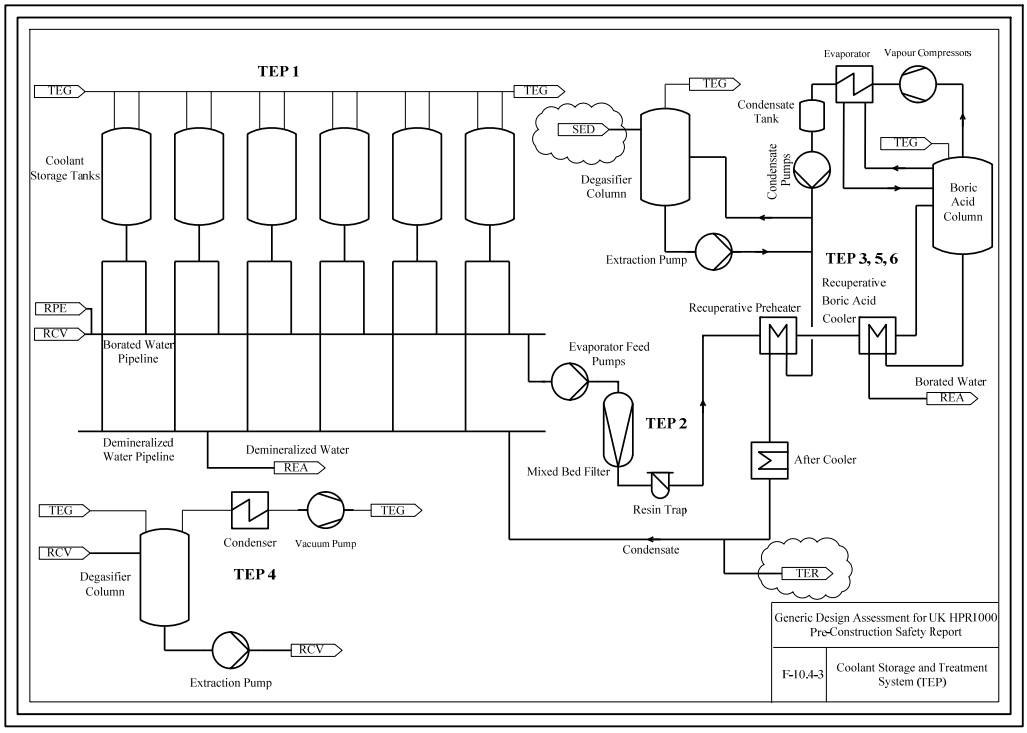

F-10.4-3 Simplified Diagram of the TEP [CSTS]

10.6 Heating, Ventilation and Air Conditioning (HVAC) Systems

10.6.3 Nuclear Auxiliary Building Ventilation System (DWN [NABVS])

10.6.3.4 System Description and Operation

10.6.3.4.2 System Operation

a) Plant Normal Conditions

In bullet point "*3)*", the following sentence "*to ensure during normal operation that contamination is contained at the source to avoid its spreading from potentially contaminated areas to potentially less contaminated areas;*" is modified to read:

> "*3) to ensure during normal operation that contamination is contained at source to avoid its spread from potentially higher contaminated areas to potentially less contaminated areas;*"

After the paragraph "*8) to ensure the conditioning, extraction and filtration……*", the following paragraph is added.

> "*9) to ensure the extraction and filtration of the gas from the TEG [GWTS] and CVI [CVS].*"

10.6.3.5 Preliminary Design Substantiation

10.6.3.5.1 Compliance with Safety Functional Requirements

c) Confinement

Before the sentence "*The DWN [NABVS] ensures the containment of radioactive material in normal operating conditions by:*", the following text is added:

"*Environmental Protection*"

Before the sentence "*The DWN [NABVS] ensures the containment of radioactive material by the isolation of air entry and exhaust in the nuclear auxiliary building following an earthquake event.*", the following text is added:

"*Limiting Radiological Consequences*"

10.6.19 ALARP Assessment

10.6.19.2 Review of Design against RGP & OPEX

In the table T-10.6 35 Consistency Review against RGP, the following sentence "*Gap is identified; analysis of HVAC design has been reviewed for the type of HEPA filters to be used.*" is modified to read:

"*Rectangular HEPA filters have been widely used in worldwide PWRs, notably in the UK, US, China and France PWRs ventilation systems. An optioneering report comparing rectangular and cylindrical HEPA filters against a set of safety, environmental, technical and economic criteria has been carried out to select HEPA filter type for UK HPR1000 that is both ALARP and BAT. The optioneering concludes that while cylindrical HEPA filters have been widely used in the UK non-PWRs nuclear installations, are recognised to provide better sealing performance and to require less management steps and operator burden during replacement, rectangular HEPA filters have been used for many decades in PWRs worldwide and in the UK, have proven efficient and effective and minimise the changes in the UK HPR1000 building layout. Rectangular HEPA filter is therefore considered to be the optimised option that represents ALARP and BAT for UK HPR1000, Reference [A-4].*"

10.10 Reference

The following documents are referenced and/or have been updated:

[1] *CGN, General Safety Requirements, GHX00100017DOZJ03GN, Rev F, November 2019.*

[2] *CGN, Methodology of Safety Categorisation and Classification, GHX00100062DOZJ03GN, Rev B, June 2018.*

[3] *CGN, The General Requirements of Protection Design against Internal and External Hazards, GHX00100028DOZJ03GN, Rev E, February 2020.*

And the following references are added:

[A-1] *CGN, Design Requirement for Facilitating Decommissioning, GHX71500016DNFF03GN, Rev C, April 2020.*

[A-2] *CGN, Consistency Evaluation for Design of Facilitating Decommissioning, GHX71500005DNFF03GN, Rev D, June 2020.*

[A-3] *CGN, Topic Report on Radioactive Waste Minimisation for Mechanical Engineering, GHX00100055DNHX03GN, Rev C, April 2020.*

[A-4] *CGN, Optioneering Report of the HEPA Filters Types, GHX08000003DCNT03TR, Rev C, June 2020.*

Appendix B – Amendments to PCSR Chapter 11 – Steam and Power Conversion System

AMENDED CONTENT

11.1 List of Abbreviations and Acronyms

CRF *Circulating Water System [CWS]*

System codes (XXX) and system abbreviations (YYY) are provided for completeness in the format (XXX [YYY]), e.g. Circulation Water System (CRF [CWS]).

11.4 Steam and Power Conversion System (Non-Safety Related)

11.4.4 Circulating Water System

11.4.4.4 System Description and Operation

11.4.4.4.4 Description of System Configuration

After the second paragraph "*The cooling water passes through the drum screens, circulating water pumps, debris filters, the condenser water boxes, and finally discharges to the outlet culverts.*", the following sentence is added:

> "*The design of CRF [CWS] is highly site specific and depends on many factors including process requirements, resource consumption, emissions of heat (to water and air), emissions of noise and plumes, etc. During nuclear site licensing phase, it might be decided to adopt other cooling water options such as recirculating cooling system with hybrid cooling towers, should this be more appropriate considering the site-specific constraints and environmental impacts.*"

Appendix C – Amendments to PCSR Chapter 21 – Reactor Chemistry

AMENDED CONTENT

21.1 List of Abbreviations and Acronyms

ALARP	As Low As Reasonably Practicable
APG	Steam Generator Blowdown System [SGBS]
BAT	Best Available Techniques
CRUD	Chalk River Unidentified Deposit
EBA	Enriched Boric Acid
ECP	Electrochemical Corrosion Potential
HPR1000 (FCG3)	Hua-long Pressurised Reactor under Construction at Fangchenggang nuclear power plant unit 3
OPEX	Operation Experience
PWSCC	Primary Water Stress Corrosion Cracking
RBS	Emergency Boration System [EBS]
RCCA	Rod Cluster Control Assemblies
PCSR	Pre-Construction Safety Report
RCV	Chemical and Volume Control System [CVCS]
RIS	Safety Injection System [SIS]
RPV	Reactor Pressure Vessel
SCC	Stress Corrosion Cracking
SEL	Conventional Island Liquid Waste Discharge Systems [LWDS (CI)]
SFP	Spent Fuel Pool
SSC	Structures, Systems and Components
TER	Nuclear Island Liquid Waste Discharge System [NLWDS]
TEG	Gaseous Waste Treatment System [GWTS]
TEP	Coolant Storage and Treatment System [CSTS]
TEU	Liquid Waste Treatment System [LWTS]
UK HPR1000	UK version of the Hua-long Pressurised Reactor

System codes (XXX) and system abbreviations (YYY) are provided for completeness in the format (XXX [YYY]), e.g. Steam Generator Blowdown System (APG [SGBS]).

21.2 Introduction

b) Approach

The sentence "*The design and operation requirements to the main chemistry functions are discussed in each case to demonstrate that function requirements are substantiated with evidence to justify arguments that the safety functions of the chemistry have been met during all operating modes.*" is modified to read:

> "*The chemistry regimes and processes have been designed to fulfil their functions considering their impact on reactivity control, structural integrity and radioactivity levels control. The chemical processes are substantiated with evidence to justify that the safety functions of the chemistry regimes are met during all operating modes.*
>
> *In addition, the chemistry regimes are optimised to:*
>
> - *- Minimise generation of radionuclides and of operational radioactive waste (PCSR Chapter 23 and PCER Chapter 3))*
> - *- Minimise the radionuclide inventory within SSC, consequently reducing the radioactive waste generated during decommissioning (PCSR Chapter 24 and PCER Chapter 3).*"

The sentence "*In summary, the safety case with its supporting documents demonstrates that the UK HPR1000 reactor chemistry design reduces risks ALARP*." is modified to read:

> "*In summary, the safety case with its supporting documents demonstrates that the UK HPR1000 reactor chemistry design reduces risks ALARP and minimises environmental impacts through the use of BAT.*"

21.4 Primary Water Chemistry and Associated Systems

21.4.2 Material Selection

21.4.2.2 Minimising Activated Elements

a) Cobalt element

2) Cobalt based alloys

After the first sentence "*Cobalt based alloy (e.g. Stellite®), is a type of cobalt-chromium-tungsten alloy designed for wear resistance, which displays outstanding hardness and corrosion resistance.*", the following text is added:

> "*As cobalt based alloys are one of the main contributor to Co-60, the application of cobalt based alloys in UK HPR1000 shall be minimised SFAIRP to minimise radionuclides generation and resulting potential radiation fields and radioactive waste arising.*

UK HPR1000 design has therefore been optimised to minimise the use of cobalt based alloys SFAIRP without impacting the level of safety of the plant, taking into account decades of experience in the design, construction, operation and decommissioning of worldwide PWRs. In the early CGN units, cobalt based alloys are used for reactor coolant pumps and RCV [CVCS] pumps. In UK HPR1000, reactor coolant pumps without cobalt based alloy have been selected; the associated justification is presented in the ALARP Assessments for Applications of Cobalt Based Alloy in Reactor Coolant Pump, Reference [C-1]. Similarly, For UK HPR1000 RCV [CVCS] pumps and other main pumps, like RIS [SIS] medium head safety injection pump, Emergency Boration System (RBS [EBS]) extra borating pump, the cobalt based alloys are no longer used."

The sentence "*However, the application of cobalt based alloys in the UK HPR1000 is strictly limited to components where a material with sufficient hardness at high temperature,*" is modified to read:

"*As a result, the application of cobalt based alloys in the UK HPR1000 is strictly limited to components where a material with sufficient hardness at high temperature,*"

The sentence "*For valves, the detailed information is presented in the Application Analysis of Cobalt based Alloy in Valves Analysis of Cobalt based Alloy in Valve.*" is modified to read:

"*On the basis of HPR1000 (FCG3) specifications, the supplementary requirements to restrict cobalt base alloys for valves conveying the medium that injected into the primary coolant have been taken into account in the design of UK HPR1000. Depending on the degree of potential irradiation effects, the nuclear island valves are divided into three categories: valves for which the use of cobalt base alloys is prohibited, valves for which use of cobalt free alloys is recommended, and valves for which the use of cobalt base alloys is not limited.*

Based on the OPEX from CGN unit, the impact of cobalt-based alloy valves on source term has been assessed for UK HPR1000. If all the cobalt-based alloy valves in primary circuit were replaced by cobalt-based alloy free valves, the activity of Co-60 in primary coolant could be reduced around 15% in general. Particularly, restricting the use of cobalt for the first category "valves for which the use of cobalt base alloys is prohibited" could make the Co-60 activity decline around 12%. The detailed information is presented in the Application Analysis of Cobalt based Alloy in Valves, Reference [26]."

b) Silver element

The first paragraph "*Silver is strictly limited in materials used in the UK HPR1000. In the reference plant of HPR1000 (FCG3), silver is only incorporated in the RPV seal gasket and*

the letdown heat exchanger in the Chemical and Volume Control System (RCV [CVCS]). But in the UK HPR1000, the structure of the heat exchanger in the RCV [CVCS] is improved with the elimination of silver coated seal gaskets." is modified to read:

"*Ag-110m is mainly produced from corrosion and activation of Ag-109, the radionuclide is one of the key corrosion products in PWRs. In the HPR1000 (FCG3), silver is strictly limited in materials used in the UK HPR1000. On the reference plant HPR1000 (FCG3), silver is incorporated in the Reactor Pressure Vessel (RPV) seal gasket, in the absorber rods of the Rod Cluster Control Assemblies (RCCAs) and in a small number of seal gaskets in nuclear auxiliary systems, such as in the letdown heat exchanger in the RCV [CVCS]. In the UK HPR1000, the design of nuclear auxiliary systems has been improved by selecting silver-free coated seal gaskets while not decreasing the performance and level of safety of the systems. Therefore, in UK HPR1000, silver is only incorporated in the RPV seal gasket and the absorber rods of the RCCAs.*

UK HPR1000 RPV consists of the closure head, the RPV body, fastening components and seals. The sealing between the closure head and vessel assemblies is achieved by C-sealing rings installed inside the two ring grooves on the lower surface of the head flange. The diameter of RPV is about five meter. The replacement frequency of RPV seals is about 18 months. Considering the strong requirement for the RPV seal gasket to have good resilience and sealing performance and the small area of contact between the seal and the reactor coolant (less than 0.02 m2), a silver layer is adopted in the outer surface of the RPV seal gasket because of its recognised high sealing performance and its proven use in worldwide PWRs."

21.4.2.3 Corrosion Control

b) Localised corrosion

Before the first sentence "*Special attention is paid to the main form of local corrosion in the UK HPR1000, notably for Stress Corrosion Cracking (SCC).*", the following text is added:

"*For the main equipment in the primary circuit, overall identification of corrosion mechanisms has been performed guided by safety regulations and standards, as well as OPEX on ageing issue of nuclear power plant. Consequently, the identified corrosion mechanisms are as follow:*

1) Loss of Material

- Crevice Corrosion

- Denting and Pitting Corrosion

2) Cracking

- *Primary Water Stress Corrosion Cracking (PWSCC)*
- *Intergranular Stress Corrosion Cracking (IGSCC)*
- *Irradiation-assisted Stress Corrosion Cracking (IASCC)*

Detailed information is provided in the Ageing and Degradation Reports established for the RPV, SG, PZR, MCL, and RVI, Reference, Reference [30], [31], [32], [33] and [34]."

The sentence "*In the UK HPR1000, the majority of stainless steels (including parent metal and weld metal) in contact with reactor coolant are ultra-low carbon content (no more than 0.035% in most case) according to RCC-M codes*" is modified to read:

"*In primary circuit of UK HPR1000, the majority of stainless steels in contact with the primary coolant are ultra-low carbon stainless steels with a carbon content of no more than 0.035wt.%. It is not susceptible to sensitisation during heat treatment or welding operation, which can prevent SCC result from intergranular attack.*"

The sentence "*Sensitised materials are not prohibited in primary circuit*" is modified to read:

"*The adoption of stainless steels with carbon content higher than 0.035 wt.% are restricted to components with strong hardness and strength requirements, including upper support plate, low core plate and fasteners in reactor vessel internals. These materials are subject to very few welding operation during construction, therefore they are not sensitised. In addition, intergranular corrosion tests are conducted to verify these materials are not sensitised, hence intergranular attack for these materials is not expected to occur.*"

The sentence "*cold work are minimised during manufacturing of SSC, cold work hardening material are only used in fasteners such as pins and screws*" is modified to read:

"*To further minimise SCC, cold work is minimised during manufacturing of SSC, the majority of materials of primary circuit SSCs are delivered in solution-annealed condition. Only fasteners are delivered in cold work hardening condition to guarantee their mechanical performance. In addition, the structural design of RVI has been optimised (most bolting structures are replaced by welding structures) to minimise the number of fasteners. Therefore, the adoption of the cold work hardening fasteners is minimised in UK HPR1000 primary circuit. In addition, the work hardening ratio of fastener is controlled to be lower than 30% according to RCC-M M3308.*"

21.4.3 Chemistry Control

21.4.3.1 Chemistry Regime

a) Boric acid

The sentence "*EBA is applied and enrichment is selected for 35 at% in the HPR1000 (FCG3). However, selection of EBA is determined by many factors.*" is modified and complemented to read:

> "*EBA is applied and enrichment is selected to be 35 at% in HPR1000 (FCG3). Selection of EBA and associated enrichment level is influenced by many factors, including safety, environmental, technical and cost factors. For UK HPR1000, Enriched Boric Acid (EBA), 35~39 at%, is selected after balancing all relevant factors and considering worldwide OPEX and RGP, Reference [C-2].*
>
> *The use of EBA minimises the total boric acid concentration in the primary coolant for a same quantity of B-10 and therefore a same reactivity control. This is not expected to result in a quantifiable decrease of tritium production from boron since tritium produced from boron is dominated by neutron reactions on B-10 which quantity is determined by reactivity control needs and therefore stays the same whatever the type of boric acid used (natural boric acid or EBA).*
>
> *Additionally, the use of EBA enable minimising the total boric acid concentration needed to ensure appropriate reactivity control, which minimises discharges of boric acid to the environment.*
>
> *EBA therefore represents BAT notably with regard to minimisation of the production and discharge of tritium for the UK HPR1000. The detailed demonstration is presented in the report of Minimisation of the Discharge and Environment Impact of Tritium, Reference [C-3].*"

b) pH control

1) Operating $pH_{300℃}$ effect

The sentence "*To reduce the CRUD on fuel surfaces and to reduce the resulting out of core radiation field, an appropriate $pH_{300℃}$ control methodology is needed for the UK HPR1000 in order to achieve the following objectives:* " is modified to read:

> "*To reduce the CRUD on fuel surfaces and to reduce the resulting out of core radiation field (thus to reduce radiation doses to personnel and discharges to the environment), an appropriate $pH_{300℃}$ control strategy is needed for the UK HPR1000 in order to achieve the following objectives:*
>
> - *Minimise material corrosion and release;*
> - *Minimise the transfer of corrosion products to the core;*

- *Minimise the deposition of corrosion products in the core.*

The $pH_{300℃}$ control strategy for the UK HPR1000 consists in a target $pH_{300℃}$ for normal operation set at 7.2 with a lithium concentration limit of 3.5mg/kg. Details are provided in the Topic Report of pH Control in the Primary Circuit of UK HPR1000, Reference [40]."

c) Hydrogen control

2) Effect of hydrogen

The following two paragraphs:

"*The presence of hydrogen suppresses the generation of oxygen in the primary coolant during power operation. Thus, it contributes to reducing general corrosion, Primary Water Stress Corrosion Cracking (PWSCC) and low temperature crack propagation of nickel alloys.*

The presence of hydrogen affects the redox potential of the primary coolant with an impact on the corrosion product solubility that can lead to a reduction in the radiation field."

are modified to read:

"*The presence of hydrogen suppresses the generation of oxidising species in the primary coolant during power operation. Thus, it contributes to reducing the Electrochemical Corrosion Potential (ECP) and general corrosion of primary system surfaces, Primary Water Stress Corrosion Cracking (PWSCC) and radiation fields.*

The presence of hydrogen affects the corrosion products' solubility and stability. This results in a reduction in the CRUD deposition on the fuel cladding and the radiation fields."

3) Operating limit

The following two paragraphs:

"*The upper value of the hard limit of hydrogen concentration of $50cm^3/kg$, at the standard temperature and pressure (273.15K and 1atm), is determined according to the hazard protection. The lower value of the hard limit of $10cm^3/kg$ is to improve material integrity and reduce the radiation field.*

During normal operation, the hard limit of hydrogen concentration in the primary coolant for the UK HPR1000 is defined as $10cm^3/kg$ ~$50cm^3/kg$, and will prevent primary and secondary barrier loss. The operating window for the hydrogen concentration in the primary coolant for the UK HPR1000 is to be set based on an assessment of OPEX. The upper value of hydrogen concentration during shutdown (before oxygenation) is set at $3cm^3/kg$ which satisfies the safety requirement. There will be no negative effect at this

concentration level."

are modified to read:

> "*During normal operation, the upper hard limit 50cm^3(STP)/kg of hydrogen concentration in the primary coolant for the UK HPR1000, at the standard temperature and pressure (273.15 K and 1 atm), is determined according to the OPEX and RGP. The upper operating window limit 50cm^3(STP)/kg is to be set based mainly on an assessment of OPEX and the EPRI Primary Water Chemistry Guideline, Reference[C-4]. And the lower operating window limit* **{ }** *is to be set based on assessments of the SCC of materials in contact with primary coolant, the radiation field control, the fuel cladding integrity and the OPEX. The upper value of hydrogen concentration during shutdown (before oxygenation) is set to satisfy the safety requirement. There is no negative effect at this concentration level.*
>
> *The optimisation on the lower limit of operating window will be presented in the report of Topic Report of Hydrogen Concentration in the Primary Circuit of UK HPR1000, Reference [41].*"

d) Zinc

The sentence "*although some cite the additional goal of mitigating PWSCC initiation*" in the first paragraph is removed.

The sentence "*There are some differences in the long-term dose rate reduction between plants that have commenced zinc injection after a number of cycles.*" is modified to read:

> "*There are some differences in the long-term dose rate reduction between plants that commenced zinc injection after a number of cycles and plants that commenced zinc injection from the commissioning phase.*"

The sentence "*According to worldwide OPEX of zinc application in PWRs, zinc is typically injected as depleted zinc acetate with Zn-64 <1 at% and with reduced content of impurities (according to specifications from the supplier).*" is removed.

The sentence "*Zinc injection has been found to be compatible with the UK HPR1000 design*", is complemented to read:

> "*Zinc injection has been found to be compatible with the UK HPR1000 design, and it was decided to adopt it for UK HPR1000, as design modification, considering notably its benefits on corrosion products generation and deposition and resulting minimisation of radiation fields and radioactive waste. The operating window for zinc in the primary coolant is recommended to be* **{ }***, with a hard limit set at* **{ }**.
>
> *In UK HPR1000, zinc is injected as depleted zinc acetate with Zn-64 <1 at% and with reduced content of impurities (according to specifications from the supplier). The use*

of zinc acetate depleted in Zn-64 instead of natural zinc acetate will significantly minimise the generation of Zn-65, which may otherwise reduce the benefits of zinc on the radiation fields' reduction. Use of depleted zinc acetate is in line with the OPEX of zinc injection applications in worldwide PWRs.

The zinc injection system is supplemented in the RCV [CVCS], with an injection tank, an injection pump and an individual injection line upstream of the charging pump. Further information is provided in the Topic Report on Zinc Injection in the Primary Circuit of UK HPR1000, Reference [42]."

e) Impurities

The first paragraph "*Impurities that are focused on are those that cause corrosion to the boundary materials in the primary circuit of a PWR. The main risks caused by the presence of these impurities include challenging the integrity of the primary circuit structural materials and fuel cladding. These impurities mainly result from: the corrosion of structural materials, makeup water, chemical additives and filling decomposition.*" is modified to read:

"*The main risks caused by the presence of impurities include challenging the integrity of the primary circuit structural materials and fuel cladding.*

Integrity of the primary circuit structural materials is maintained by the normal control of impurities, including chlorides, fluorides, sulphate, oxygen, and sodium.

Integrity of fuel cladding with respect to crud deposition is maintained by the control of impurities in the primary circuit, including calcium, magnesium, aluminium, and silica.

Meanwhile, the impurity reduction has a beneficial effect on the reduction of the general corrosion and the consequent source term, which contribute to the radiation field reduction and waste minimisation.

The control of impurities in the primary coolant is also necessary in order to identify possible risks and provide the appropriate information for taking corrective actions by the operators."

In bullet point "*1) Chloride, fluoride, sulphate and dissolved oxygen*", the first two paragraphs:

"*SCC of stainless steel can be induced by chloride in the primary circuit of a PWR under high temperature and in aerobic conditions. Alloy 690TT has high resistance to chloride-induced stress corrosion.*

In the primary circuit, fluoride can cause the corrosion of zirconium alloy, and the corrosion rate will increase with an increase in fluoride concentration. Fluoride and sulphate can also cause SCC of stainless steel."

are modified to read:

"*Laboratory and field data on initiation of austenitic stainless steels SCC as a function of the following influencing factors have been considered:*

- *Material state;*
- *Stress/loading; and*
- *Water chemistry and effects of ionic species e.g., Cl^-, SO_4^{2-}, O_2, leading to elevated electrochemical potential (ECP)*

The main effects of chloride, fluoride and sulphate contamination are the increase of material corrosion, especially for the stainless steels. These species can cause localised corrosion phenomena, mainly at high temperatures in combination with oxygen. To prevent/minimise pitting corrosion, crevice corrosion and SCC, hard limits for chloride, fluoride and sulphate (1.5 mg/kg) are defined for UK HPR1000.

The concentrations of chloride, fluoride and sulphate are regarded as control parameters, and the operating window is less than 0.15 mg/kg for each, concerning the material integrity of the RCP [RCS] during normal operation and shutdowns."

The third paragraph:

"*Oxygen reacts with various materials to form corrosion products, including stainless steel at high temperatures, carbon steel at various temperatures and copper alloy in alkaline condition. The main hazards caused as a result of these corrosion products include: promoting the corrosion of fuel cladding, increasing the content of radioactive elements, and increasing the SCC risk of stainless steel. Even if there is a low concentration of dissolved oxygen in coolant, it will have a harmful effect on the Intergranular Attack (IGA) of the pipeline. Controlling the oxygen concentration is important since this can reduce the deposition and radioactivity on the fuel surface.*"

is modified to read:

"*Presence of oxygen presence in the primary circuit increases the risks associated with the fuel cladding corrosion and the SCC of nickel alloys and stainless steels.*

During the start-up, the oxygen concentration is monitored in the RCP [RCS] and PZR, and controlled to less than 0.1mg/kg in the RCP [RCS] by the hydrazine injection when the temperature increases above 120°C.

Oxygen in the RCP [RCS] during normal operation is not controlled because the hydrogen is monitored and controlled to keep the reducing environment.

At temperature lower than 80°C during shutdown, the oxygenation of the primary circuit enables the dissolution of nickel and corrosion products. This enables the radionuclide to be removed by RCV [CVCS] purification in order to limit its deposition

on the circuits and worker doses during outages. This oxygenation can be carried out by hydrogen peroxide injection with the objective of enhancing the deposited corrosion product release into the primary circuit."

In the bullet point "*2) Calcium, magnesium, aluminium and silica*", the third paragraph is removed and replaced by the following text:

"*In order to reduce the risk of the zeolites deposition on the surface of fuel cladding in the primary circuit, the limits for calcium, magnesium, aluminium and silica are established based on the requirements from fuel suppliers.*

The silica concentration has been defined **{ }** *for UK HPR1000 after taking into account zinc injection, recommendations from fuel vendor, industry guideline and operating OPEX of CPR1000 power plant. Silica concentration in the RCP [RCS] is a diagnostic parameter with regards to the indirect impact on material integrity and the waste management.*

Silica concentration in the primary circuit has to be managed in correlation with the boron recycling strategy, in order to optimise the enriched boron consumption while limiting silica concentration in the primary coolant. In the primary coolant clean-up system, the silica is not well retained by the filters and demineralisers.

For the calcium, magnesium, aluminium, lower concentrations can be reached via the purification chains as these impurities which are in the form of cations, are readily removed by the resins. Therefore, 0.05mg/kg is defined for the operating limit for aluminium, calcium and magnesium concentrations in the RCP [RCS], which are regarded as diagnostic parameters to identify the trend for the zeolite formation.

The detailed demonstration is updated in the report of Topic Report on Impurity Control for the Operation, Reference [43]."

21.4.3.2 Chemistry Provisions for Commissioning and Operation

b) Operation phases

In the bullet point "*3) Power operation*", after the last paragraph, the following text is added:

"*Radiochemistry parameters*

In PWRs, fission products are normally retained in the fuel rods, however they can be released into the primary coolant as a result of: 1) fuel failure or 2) tramp uranium deposited on fuel cladding surfaces during manufacturing or disseminated by failed fuel from the previous cycles; the former one being the main contributor to fission products on the primary coolant.

Therefore, fission products can be used as fuel performance indicators. Tracer

isotopes used as fuel performance indicators should meet the following criteria:

1) *High fission yields;*
2) *Appropriate half-lives:*
   - *Long enough to assure their transfer from failed fuel to the sampling station;*
   - *Short enough to reach equilibrium in a short period of time with a representative activity following fuel failure;*
3) *Easily detected by gamma spectrometry.*

The nuclides that are suitable for monitoring fuel failure during power operation are listed in table T-C-1 below, Reference [C-5].

T-C-1 The characteristics of the nuclides that could be used as fuel performance indicators

Isotope	Cumulative Fission Yield (%)	Half-life	Gamma Ray 1 keV (%)	Gamma Ray 2 keV (%)	Gamma Ray 3 keV (%)
Kr-85m	0.93	4.48 hours	151.2 (75.1)	304.9 (13.7)	---
Kr-87	1.76	1.37 hours	402.6 (49.6)	---	---
Kr-88	2.44	2.84 hours	196.3 (26)	834.8 (13)	1530 (10.9)
Xe-133	6.84	5.24 days	81 (38.3)	---	---
Xe-135	7.07	9.10 hours	249.8 (90.2)	---	---
Xe-138	5.77	14.10 minutes	258.3 (31.5)	434.5 (20.3)	1768.3 (16.7)
I-131	3.37	8.04 days	364.5 (81.2)	---	---
I-132	4.86	2.28 hours	667.7 (98.7)	772.6 (76.2)	---
I-133	6.81	20.8 hours	529.9 (86.3)	---	---
I-134	7.49	52.6 minutes	847 (95.4)	884.1 (65.3)	---
I-135	6.38	6.57 hours	1260.4 (28.9)	1131.5 (22.5)	---

1) *Sum of Noble Gases and Iodine*

The main fission products are noble gases and iodine, and the overall activity of these fission products provides good indication of the fission products activity levels in the primary coolant and is one of the essential input data for fuel failure assessment.

- $^{131}I_{eq}$

  I-131 is chosen as the reference nuclide because of its longer half-life compared to other iodine isotopes. Considering the radioactivity of other isotopes of iodine, 131Ieq is used to indicate the activity concentration of iodine.

$$^{131}I_{eq} = {}^{131}I + {}^{132}I/30 + {}^{133}I/4 + {}^{134}I/50 + {}^{135}I/10$$

- *Sum of noble gases*

  The noble gases concentration is higher than that of iodine in the fuel-to-cladding gap inside the intact fuel pellet. The noble gases are chemically inert and escape more readily from the fuel defects; while Iodine is usually affected by sorption phenomenon and more easily trapped in the fuel-to-cladding gap. Therefore, a fuel failure onset can be detected in a timelier manner based on noble gases surveillance than on iodine surveillance. The opening of a fuel-to-cladding gap due to temperature and pressure variations during transients tends to result in a iodine activity spike in the primary coolant. According to Reference [C-5], iodine activity spike during transient can be inferred based on the iodine activity and the sum of noble gases during stable condition.

  The total sum of noble gases can be expressed by the following formula:

$$\Sigma gas = {}^{85m}Kr + {}^{87}Kr + {}^{88}Kr + {}^{133}Xe + {}^{135}Xe + {}^{138}Xe$$

2) *Xe-133, Xe-133/Xe-135*

Xe-133 is a good indicator of fuel integrity because it meets well the three criteria of tracer isotopes mentioned above:

- *It has high fission yields;*
- *Its half-life is long enough to ensure its transport from the gap to the primary coolant; short enough to reach equilibrium in a few days with a representative activity;*
- *It can easily be detected by gamma spectrometry as its γ-ray at 81keV (with the highest decay branching ratio) cannot be masked by other significant nuclides in the primary coolant.*

However, Xe-133 activity levels in the primary coolant are influenced by the

presence of tramp uranium, if any. In absence of fuel failures, the activity concentration of short half-life radionuclides in the primary coolant coming from tramp uranium should be higher than that of the longer half-life ones. When a fuel defect exists, release of nuclides from the defect is influenced by the transfer process inside the fuel-to-cladding gap and through the defect, and the activity concentration of long half-life nuclides in the primary coolant becomes dominant. The comparison of isotopic ratio Xe-133/Xe-135 is therefore used together with the activity concentration of Xe-133 to identify the onset of fuel failure.

This is consistent with international practice, including in France, China and in the UK.

3) I-134

The origins of fission products are both fuel failure and tramp uranium. In order to conduct fuel failure evaluations, it's important to eliminate the interference from tramp uranium.

Tracers for tramp uranium should meet the following criteria:

- *The major origin of the tracer should be the uranium in direct contact with the primary coolant;*
- *The activity concentration of this tracer associated with this source can be quantified.*

The fission products with short half-life, routinely and directly measured by gamma spectrometry are good candidates based on the fact that they decrease in the fuel-to-cladding gap before reaching the cladding defect.

The most suitable isotope currently identified is I-134:

- *Its half-life is short enough to eliminate the interference from fuel failure and long enough to allow detection;*
- *It can be clearly identified using gamma spectrometry; and,*
- *It is used in many PWRs, notably in France and China, for this purpose.*"

21.4.4 Substantiation of System Requirement

21.4.4.3 Coolant Storage and Treatment System

a) System functional requirement

The paragraph "*The TEP [CSTS] stores the primary effluents discharged by the RCV [CVCS] and collected by the Nuclear Island Vent and Drain System (RPE [VDS]), and then purifies them through the demineraliser (whose main function is removing caesium which is not*

eliminated by the RCV [CVCS], meanwhile the excess lithium can be also removed) and separates the primary effluents into demineralised water for reuse and concentrated boric acid at 7000mg/kg via the evaporation unit. The TEP [CSTS] can degasify the demineralised water makeup from the nuclear island demineralised water distribution system.", is modified and complemented to read:

"*The TEP [CSTS] stores the primary effluents discharged by the RCV [CVCS] and part of the process drains collected by the Nuclear Island Vent and Drain System (RPE [VDS]), and then purifies them through the demineraliser (which main function is removing caesium which is not eliminated by the RCV [CVCS], and, when needed, the excess lithium) and separates, via the evaporation unit, the primary effluents into distillates, for reuse as demineralised water, and concentrates with 7000mg/kg boric acid, for reuse. The TEP [CSTS] can degasify the demineralised water makeup from the nuclear island demineralised water distribution system to produce fresh demineralized water for use in the primary coolant in case the TEP [CSTS] evaporator distillates cannot be reused.*

In order to control the content of H-3 in the primary circuit, the distillate from the TEP [CSTS] evaporator is transferred to the TER [NLWDS] by the operator. To minimise the radioactivity of discharged primary effluents, the solids and soluble impurities in the reactor coolant are removed using filters and demineralisers before it is treated in the TEP [CSTS] evaporator. The distillate from the evaporator is then degassed prior to it being transferred to the TER [NLWDS], to notably remove any noble gases. Gaseous radioactive waste from the degasifier is transferred to the TEG [GWTS] for treatment.

In order to control the content of Xe in the primary circuit during shutdown, Coolant is routed from the RCV [CVCS] to the coolant degasification subsystem (TEP [CSTS] 4) via the letdown pipeline. Degasified coolant is returned to the RCV [CVCS]. Gases such as Xe removed from the primary coolant are transferred to the TEG [GWTS].

The operation controls are presented in the System Operation and Maintenance of TEP [CSTS], Reference [50]."

21.4.4.4 Liquid waste treatment system

In the bullet point "*a) System functional requirement*", the table "*T-21.4-5 Summary of TEU [LWTS] Chemistry Control*" is modified to read:

T-21.4-5 Summary of TEU [LWTS] Chemistry Control

Parameter	*Reason*	*Treatment Method*
pH	*To guarantee the receiving environment water do not show signs of anthropogenic disturbance and remain within the range normally associated with undisturbed condition, Reference [C-6]*	*Nitric acid addition Sodium hydroxide addition*
Radioactivity level (DF)	*To minimise activity discharged to the environment to ALARA.*	*Demineralisation* *Evaporation* *Retention pit*
Sodium-to-boron ratio	*To reduce risk of boron crystallization to minimise secondary waste and unavailability of evaporator*	*Sodium hydroxide addition* *Nitric acid addition* *1
Total salinity	*To protect ion-exchange resins from adsorption saturation and minimise second waste*	*Evaporation*

*Note *1: If there is an excess of sodium, nitric acid injection is needed. However, nitric acid is injected to adjust the pH and it does not affect sodium-to boron ratio.*

21.5 Secondary Water Chemistry and Associated Systems

21.5.3 Description of Secondary Circuit

21.5.3.2 Chemistry Provisions for Operation

In the bullet point "*a) Startup*", after the last paragraph, the following text is added:

"*Radiochemistry parameters*

- *Total γ for Steam Generator Blowdown System (APG [SGBS])*

  The radionuclides from the primary circuit may enter the secondary circuit through a leakage in the tube bundles of steam generators, and then flow into the various secondary circuit systems. Based on the OPEX of CGN units, total γ of APG[SGBS] is selected as control parameter."

In the bullet point "*b) Power operation*", after the last paragraph, the following text is

added:

"*Radiochemistry parameters*

- *Total γ for Steam Generator Blowdown System (APG [SGBS])*

  The monitoring management is same as for the startup phase."

In the bullet point "*c) Shutdown*", after the last paragraph, the following text is added:

"*Radiochemistry parameters*

- *Total γ for Steam Generator Blowdown System (APG [SGBS])*

  The monitoring management is same as for the startup phase."

21.6 Auxiliary Water Chemistry and Associated Systems

21.6.3 Chemistry Control

21.6.3.2 Chemistry Provisions for Operation

After the last paragraph, the following text is added:

"*d) Radiochemistry parameters*

1) *Total γ for RRI [CCWS]*

   Total γ monitoring of RRI [CCWS] is used to continuously monitor radioactive concentration of water in RRI [CCWS], to identify failures of radioactive system heat exchangers cooled by RRI [CCWS] in a timely manner and minimise contamination of RRI [CCWS]. Based on the OPEX of CGN units, total γ of RRI [CCWS] is selected as control parameter.

2) *Total γ for TER [NLWDS]*

   TER [NLWDS] collects liquid wastes from the nuclear island, and discharges them under monitoring to the environment when they meet the discharge objectives, after mixing, sampling and analysis. The continuous gamma monitoring on the discharge line and associated automatic closure of the discharge valves minimise the risk of unexpected discharge, and protect the environment and the members of public from such discharges. Based on the OPEX of CGN units, total γ of TER [NLWDS] is selected as control parameter.

3) *Total γ for SEL [LWDS (CI)]*

   SEL [LWDS (CI)] collects the effluents from the APG [SGBS] and Waste Fluid Collection System for Conventional Island (SEK [WFCSCI]), and discharges them to the environment under control. The continuous gamma monitoring on the discharge line and associated automatic closure of the discharge valves minimise the risk of unexpected discharge, and protect the

environment and the members of public from such discharges. Based on the OPEX of CGN units, total γ of SEL [LWDS (CI)] is selected as control parameter.

4) Xe-133, I-131, Co-58 and Cs-137) for the PTR [FPCTS] Spent Fuel Pool (SFP)

During normal operation, the radioactivity of spent fuel pool water need to be controlled continuously to ensure the personnel radiation exposure is minimised SFAIRP when handling and lifting the spent fuel. Total γ and radiochemistry species including Xe-133, I-131, Co-58 and Cs-137 are selected as control parameters based on the OPEX of CGN units."

21.8 Sampling and Monitoring

21.8.2 Substantiation of Chemistry Sampling and Monitoring Requirement

21.8.2.1 Nuclear Sampling System

a) Primary sampling system

Bullet point "*5) Liquid and gaseous waste treatment systems*" is modified to read:

"*5) Gaseous waste treatment system*

Chemistry and radiochemistry parameters are monitored according to the justification in the previous sub-chapter and the specific limits and conditions are provided in the Generic Water Chemistry Specification (LCO), Reference [C-7]."

21.11 References

The following documents are referenced and/or have been updated:

[26] CGN, Application Analysis of Cobalt based Alloy in Valves, GHX44400004DNHX03GN, Rev B, May 2020.

[30] CGN, Ageing and Degradation of RPV, GHX00100033DPCH03GN, Rev B, June 2020.

[31] CGN, Ageing and Degradation of SG, GHX00100035DPCH03GN, Rev B, June 2020.

[32] CGN, Ageing and Degradation of RVI, GHX00100041DPCH03GN, Rev B, July 2020.

[33] CGN, Ageing and Degradation of MCL, GHX00100039DPCH03GN, Rev B, July 2020.

[34] CGN, Ageing and Degradation of PZR, GHX00100037DPCH03GN, Rev B, July 2020.

[40] CGN, Topic Report of pH Control in the Primary Circuit of UK HPR1000, GHX00100007DCHS03GN, Rev F, June 2020.

[41] CGN, Topic Report on Hydrogen Concentration Control in the Primary Circuit, GHX00100008DCHS03GN, Rev F, September 2020.

[42] CGN. Topic Report on Zinc Injection in the Primary Circuit of UK HPR1000, GHX00100010DCHS03GN, Rev D. March 2020.

[43] CGN, Topic Report on Impurity Control for the Operation, GHX00100103DCHS03GN, Rev E, June 2020.

[50] CGN, TEP- Coolant Storage and Treatment System Design Manual Chapter 6 System Operation and Maintenance, GHX17TEP006DNFF45GN, Rev B, July 2019.

[85] CGN, ALARP Demonstration Report of PCSR Chapter 21, GHX00100063KPGB03GN, Rev B, October 2019.

And the following references are added:

[C-1] CGN, ALARP Assessments for Applications of Cobalt Based Alloy in Reactor Coolant Pump, GHX44400003DNHX03GN, Rev A, November 2019.

[C-2] CGN, Selection of Enriched Boric Acid for UK HPR1000, GHX00100003DNHX45GN, Rev A, June 2020.

[C-3] CGN, Minimisation of the Discharge and Environment Impact of Tritium, GHX00100004DOHB00GN, Rev D, July 2020.

[C-4] EPRI, PWR Primary Water Chemistry Guidelines, Volume 1, Revision 4 TR-105714, Palo Alto, March 1999.

[C-5] Maria Aránzazu Tigeras Menéndez, Fuel Failure Detection, Characterization and Modelling: Effect on Radionuclide in PWR Primary Coolant, A thesis submitted for the degree of Doctor of Philosophy in Sciences by Polytechnic University of Madrid and Paris XI, May 2009.

[C-6] Official Journal of the European Union, Directive 2000/60/EC of the European Parliament and of the Council of 23 October 2000 establishing a framework for Community action in the field of water policy, OJ L 327, December 2000 and amended in October 2014.

[C-7] CGN, Generic water chemistry specification (LCO), GHX00100101DCHS03GN, Rev C, March 2020.

Appendix D – Amendments to PCSR Chapter 22 – Radiological Protection

AMENDED CONTENT

22.1 List of Abbreviations and Acronyms

ALARP	As Low As Reasonably Practicable
BAT	Best Available Techniques
BFX	Fuel Building
BNX	Nuclear Auxiliary Building
BQF	Spent Fuel Interim Storage Facilities
BQZ	Interim Storage Facility for Intermediate Level Waste
BRX	Reactor Building
BWX	Radioactive Waste Treatment Building
CGN	China General Nuclear Power Corporation
CPR1000	Chinese Pressurised Reactor
ERIC/PPE	Eliminate, Reduce, Isolate, Control, Personal Protective Equipment
GDA	Generic Design Assessment
ONR	Office for Nuclear Regulation (UK)
OPEX	Operating Experience
PCER	Pre-Construction Environmental Report
PCSR	Pre-Construction Safety Report
PPE	Personal Protective Equipment
PTR	Fuel Pool Cooling and Treatment System [FPCTS]
PWR	Pressurised Water Reactor
RCP	Reactor Coolant System [RCS]
RCV	Chemical and Volume Control System [CVCS]
SRE	Sewage Recovery System [SRS]
SSC	Structures, Systems and Components
TEP	Coolant Storage and Treatment System [CSTS]
TES	Solid Waste Treatment System [SWTS]

TEU	*Liquid Waste Treatment System [LWTS]*
UK HPR1000	*UK version of the Hua-long Pressurised Reactor*

System codes (XXX) and system abbreviations (YYY) are provided for completeness in the format (XXX [YYY]), e.g. Fuel Pool Cooling and Treatment System (PTR [FPCTS]).

22.2 Introduction

In the fourth paragraph, the last sentence is modified to read:

> "*This chapter provides the evaluation of radiation doses to members of the public from direct radiation.*"

22.5 Source Term

22.5.2 Overview of UK HPR1000 Source Term

22.5.2.1 Source Term Categories

Bullet point "*d) Derived Source Term;*" is modified to read:

> "*d) Derived Source Term, which quantifies the activity concentration of radionuclides present within components (fluid source term and accumulation source term) and also quantifies the activity concentration of radionuclides deposited on the inner surface of components (deposit source term). It also quantifies the concentration of radionuclides in the solid radioactive waste and in the spent fuel pool water;*"

22.5.2.2 Radionuclide Selection

After bullet point "*e) Selection of the relevant radionuclides;*", the following bullet point is added to read:

> "*f) Justification of the selected radionuclides based on CGN and worldwide OPEX;*"

22.5.3 Primary Coolant Source Term

22.5.3.1 Fission Products

After the paragraph "*For transient conditions and shutdown conditions, the specific radioactivity of fission products is calculated based on steady-state values by multiplying them with corresponding peaking factor. The peaking factors are defined as the ratio between measured concentration in transient conditions and that in steady-state conditions.*", the following paragraph is added:

> "*Justification of UK HPR1000 fission products source term values is carried out by comparison with CGN and EDF OPEX which shows that the UK HPR1000 fission products source term values for primary coolant are reasonable and appropriate.*"

The last paragraph "*The methodology and parameters used to determine the fission*

products are presented in the Primary Coolant Source Term Methodology Report, Reference [19] and Primary Coolant Source Term Calculation Report, Reference [20]." is modified to read:

> "*The methodology and parameters used to determine the fission products source term as well as its justification is presented in the Primary Coolant Source Term Methodology Report, Reference [19], and the Primary Coolant Source Term Calculation Report, Reference [20].*"

22.5.3.2 Corrosion Products

After the table "*T-22.5 2 List of Corrosion Products Radionuclides*", the following two paragraphs are added:

> "*The specific radioactivity of corrosion products is determined by statistics analysis of OPEX data from comparable stations which notably have similar primary circuit chemical conditions, inner surface material and clean-up systems. Steady-state value and transient value are estimated considering the value that encompasses different percent of the OPEX data during power operation. Shutdown value is determined by the maximum value of the current OPEX data which is taken as the oxygenation peak value during shutdown.*"

> "*Justification of UK HPR1000 corrosion products source term values is carried out by comparison with CGN and EDF OPEX which shows that the UK HPR1000 corrosion products source term values for primary coolant are reasonable and appropriate.*"

The last paragraph "*The methodology and parameters used to determine the corrosion products are presented in the Primary Coolant Source Term Methodology Report, Reference [19] and Primary Coolant Source Term Calculation Report, Reference [20].*" is modified to read:

> "*The methodology and parameters used to determine the corrosion products source term as well as its justification are presented in the Primary Coolant Source Term Methodology Report, Reference [19], and the Primary Coolant Source Term Calculation Report, Reference [20].*"

22.5.3.3 Activation Products

22.5.3.3.5 Argon-41

Between the first paragraph "*Argon-41 (Ar-41) is produced by neutron activation of Argon-40 (Ar-40) which is dissolved in the coolant and has a half-life of 1.83 hours. There is very little argon dissolved in the coolant, as the coolant is degassed before reactor start-up.*", and the second paragraph "*The methodology and parameters used to determine the activation products are presented in the Primary Coolant Source Term Methodology Report, Reference [19] and the Primary Coolant Source Term Calculation Report, Reference [20].*" a new sub-chapter is added:

"*22.5.3.3.6 Justification of Activation Products*

Justification of UK HPR1000 activation products source term values, such as tritium and C-14, is carried out by comparison with relevant OPEX (CGN fleet, EDF fleet, German KONVOI plants, as relevant) which shows that the UK HPR1000 activation products source term values for primary coolant are reasonable and appropriate."

The last paragraph "*The methodology and parameters used to determine the activation products are presented in the Primary Coolant Source Term Methodology Report, Reference [19] and Primary Coolant Source Term Calculation Report, Reference [20].*" is modified to read:

"*The methodology and parameters used to determine the activation products as well as its justification are presented in the Primary Coolant Source Term Methodology Report, Reference [19], and the Primary Coolant Source Term Calculation Report, Reference [20].*"

22.5.3.4 Actinides

After the paragraph "*For actinides from tramp uranium, the initial composition is the same as that in the fresh fuel assembly, but it is constantly changing throughout the fuel cycle. For the released actinides from defective fuel rods, its initial composition is determined by the burnup of failed fuels and it will also change when it is irradiated by neutron at the core throughout the fuel cycle.*" the following paragraph is added:

"*Justification of UK HPR1000 actinides source terms values is carried out by comparison with international OPEX, e.g. OPEX at EDF units and other international PWRs, which shows that the UK HPR1000 actinides source term values of primary coolant are reasonable and appropriate.*"

The last paragraph "*The methodology and parameters used to determine the actinides are presented in the Primary Coolant Source Term Methodology Report, Reference [19] and Primary Coolant Source Term Calculation Report, Reference [20].*" is modified to read:

"*The methodology and parameters used to determine the actinides as well as its justification are presented in the Primary Coolant Source Term Methodology Report, Reference [19], and the Primary Coolant Source Term Calculation Report, Reference [20].*"

22.5.4 Spent Fuel Assembly Source Term

In the first paragraph, after the sentence "*Uranium in the new fuel will be converted into other actinides following neutron irradiation in the core and fission products will be produced during plant operation. …… These actinides, fission products and activation products in the fuel assembly material are considered for the radiological protection during fuel assembly storage and transport, and for the radioactive waste and spent fuel*

management, notably for the disposability assessment.", the following two paragraphs are added:

"*The source term values of UK HPR1000 fuel assemblies are calculated by application of PALM code. PALM code is a validated point depletion calculation code developed by CGN. Point depletion calculation codes are widely used worldwide to calculate the neutron-induced activity of materials at different time points, e.g. FISPACT-II.*"

"*PALM code takes information, such as cross section, decay information and fission product yields, from dedicated library and calculates the composition of structures/components after irradiation by solving the depletion equation.*"

22.5.5 Secondary Coolant Source Term

22.5.5.3 Secondary Coolant Source Term Calculation

The title of Sub-chapter 22.5.5.3 "*22.5.5.3 Secondary Coolant Source Term Calculation*" is modified to read:

"*22.5.5.3 Secondary Coolant Source Term Calculation and Justification*".

The first paragraph "*The secondary coolant source term is derived from realistic and design basis levels of the primary coolant source term.*" is modified to read:

"*The radionuclides in a PWR are produced in the fuel, SSC and coolant in/around the reactor core and then are transferred throughout the plant via several mechanisms:*

a) Normal water/gas movements related to normal operation of the plant;

b) Leaks, drainage, flushing;

c) Replacement of equipment during maintenance (or decommissioning).

During these transfers, radionuclides can notably decay, be trapped in treatment equipment, be removed by decontamination or deposit in circuit.

As such, in various SSC "downstream" the reactor core, the radionuclides activity concentration will be the result of the above phenomenon/mechanisms and therefore a radioactivity balance differential equation method is normally used to calculate the source term in the various plant SSC.

The radioactivity balance differential equation method has been applied to calculate the UK HPR1000 secondary coolant source term, derived source term and airborne activity.

Justification of UK HPR1000 secondary coolant source term values have also been carried out by comparison with CGN fleet OPEX as well as EDF fleet OPEX and UK

EPR values, which shows that the UK HPR1000 secondary coolant source term values are reasonable and appropriate."

The last paragraph "*The detailed calculation parameters used for the calculation of the secondary coolant source term are presented in the Secondary Coolant Source Term Supporting Report, Reference [23].*" is modified to read:

"*Further information can be found in the Secondary Coolant Source Term Supporting Report, Reference [23].*"

22.5.6 Derived Source Term

22.5.6.1 Definition of Derived Source Term

The first paragraph "*A number of the radioactive systems in the UK HPR1000 are significant in the determination and evolution of the source terms. The primary and secondary circuit and associated systems are the main contributors. The main radioactive systems to be considered are:*" is modified to read:

"*Radionuclides are generated in reactor core area. Most of them are retained in the fuel and in the activated structures but a small part is produced in the primary coolant directly or is transferred to the primary coolant (e.g. through leaks or diffusion). The part carried by the primary coolant is transported to the reactor coolant system, secondary coolant system (in case of SG tube leaks), auxiliary systems and waste management systems. The radionuclides in those systems can be:*

a) Present in the fluid (gas/steam phase and/or liquid phase) passing through or stored in the various components of the systems. This is defined as the fluid source term;

b) Trapped in the accumulation units of the systems. This is defined as the accumulation source term;

c) Deposited on the inner surface of the components of the systems. This is defined as the deposit source term.

Considering the GDA scope, the main radioactive systems to be considered are:"

Bullet point "*a) RCP [RCS];*" is modified to read:

"*a) RCP [RCS] (Reactor core and relevant internal components are excluded, they become radioactive due to activation of their material constituents and their source term is quantified in the Activated Structures Source Term Report, Reference [26];*"

After bullet point "*o) Sewage Recovery System (SRE [SRS])*", the following paragraph is added:

"*For each radioactive system, the components mainly consist of pipes, tanks, delay*

beds, filters, demineraliser beds, evaporators, heat exchangers, degassing towers and solid radioactive waste packages."

22.5.6.3 Derived Source Term Calculation

The following two paragraphs:

"*For each radioactive system, the specific activities of components are derived from the primary coolant source term. The components mainly consist of pipes, tanks, delay beds, filters, demineralised beds, evaporators, heat exchangers, degassing towers and solid radioactive packages. For the RCP [RCS], the source terms for the steam generator, pressuriser and reactor coolant pump are also calculated.*

The source terms are derived from realistic and design basis levels of primary coolant source term. According to system and equipment design parameters, the derived source terms are developed in consideration of radionuclide migration in the coolant. Treatment, filtration, degassing and demineralisation are considered and modelled in the calculation of derived source terms. In some cases (e.g. the RCV [CVCS] filter and deposit source term), OPEX data is used to obtain a more appropriate source term."

are modified to read:

"*For the fluid source term and accumulation source term, the radioactivity balance differential equation method is applied based on the specific considerations to reflect radionuclides production, disappearance and migration mechanisms and behaviour, which are specific to the different radionuclides and source terms.*

For the deposit source term, due to the complex mechanisms of transport and deposition, the deposit source term is difficult to accurately evaluate by theoretical models. It is also not easy to regularly monitor the radionuclides concentration deposited on the inner surface of components. Instead dose rate measurements are often carried out sometimes combined with a detailed measurement of radionuclides activity concentration performed on a campaign basis. Therefore, deposition source term values are usually obtained through a method combining OPEX data and theoretical calculation."

In the third paragraph, the sentence "*For radioactive components in the reactor building, such as the RCP [RCS] components and RCV [CVCS] regenerative heat exchanger, N-16 are the primary contributors to the gamma ray source term during power operation*" is removed.

22.5.7 Gaseous and Liquid Discharges

The paragraph "*The gaseous and liquid discharges from nuclear power plants during normal operation are used for the environmental impact assessment. The quantification of gaseous and liquid discharges and limits is addressed in the PCER Chapter 6: Quantification of Discharges & Limits, Reference [15].*" is modified to read:

"*22.5.7.1 Definition of Gaseous and Liquid Discharges*

A nuclear power plant produces by nature radioactive materials during its operation. These materials are minimised at source as far as reasonably practicable, and the unavoidable part produced is treated by physical or chemical processes as and where possible, and ultimately discharged to the environment in the form of gaseous (gaseous here is used for gases and airborne particles, for convenience to smooth the reading) or liquid waste, or disposed of to relevant approved facilities in form of solid waste. The radioactive gaseous and liquid discharges are one of the main contributors to environmental impact.

22.5.7.2 Radionuclide Selection

The radionuclides considered for the quantification of gaseous and liquid discharges and limits include fission products, corrosion products and activation products presented in the primary coolant. Among them, significant radionuclides are selected considering a series of criteria provided in the EA limit setting guidance, notably including consideration of their discharge quantity (in terms of activity levels) and potential impact on environment.

22.5.7.3 Quantification of Discharges and Limits

To comply with UK requirements, the quantification of UK HPR1000 radioactive gaseous and liquid expected discharges and limits is based on OPEX data from similar power plants, taking into account appropriate adjustment for the possible differences in the UK HPR1000 discharges due to the differences in the design between UK HPR1000 and units from which OPEX data have been used. Consideration is also given to appropriate headroom to account for the uncertainty due to variations, from one cycle to another, of plant parameters or system operation within the normal operating range.

More information on the quantification of gaseous and liquid discharges and limits is provided in PCER Chapter 6: Quantification of Discharges & Limits, Reference [15], and its supporting document, Estimation of Radioactive Gaseous and Liquid Discharges and Limits for UK HPR1000, Reference [D-1]."

22.5.8 Airborne Activity

22.5.8.3 Airborne Activity Calculation

In the first paragraph, after the sentence "*The airborne concentration of radionuclides is derived from realistic and design basis levels of the primary coolant source term.*", the following sentence is added:

"*The radioactivity balance differential equation method is applied based on the specific considerations to reflect radionuclides production, disappearance and migration mechanisms and behaviour, which are specific to the different*

radionuclides and source terms."

22.5.12 Minimisation of Source Term

The title of Sub-chapter 22.5.12: "*22.5.12 Minimisation of Source Term*" is modified to read:

"*22.5.12 Source Term ALARP/BAT Demonstration*".

All content in this sub-chapter "*There are some key inputs which are considered at the start of developing the source term …… Further ALARP/BAT assessments will be carried out as needed to consider further potential and reasonably practicable actions source term reduction.*" is modified to read:

"*Source term is influenced by a great number of factors from various technical areas, such as reactor chemistry, structural integrity, fuel and core, mechanical engineering, and is input to many others, e.g. radiation protection, radioactive waste management, decommissioning and environmental areas. Source term being the origin of all radiological risks/impacts, the demonstration that source term is ALARP and BAT is actually included in those demonstrations of all relevant related areas. In other words, the demonstration that the source term is ALARP and BAT will be achieved when the demonstration in all relevant areas has been done and the associated radiological risks/impacts demonstrated to be reduced ALARP/minimised ALARA through the application of BAT. It consists of the following steps:*

a) A set of requirements on prevention and reduction/minimisation of the radiological risks/impacts (at source, but not only) are formulated in accordance with ALARP/BAT principles;

b) The requirements are considered during the ALARP and BAT demonstrations of all relevant areas, in accordance with the project ALARP and BAT methodologies;

c) If the requirements are fulfilled in all relevant areas and the analysis in all areas yields no further optimisation, then source term is considered optimised and demonstrated ALARP and BAT;

d) If gaps are identified in any of the relevant areas, they will be managed through the project optioneering process. The options that will be selected to close the gaps, will be demonstrated ALARP and BAT for all relevant areas. The relevant source terms will be updated if needed to reflect these ALARP and BAT options. The updated source terms will be considered optimised and ALARP and BAT;

e) A set of documentations will be produced to reflect the analysis done in the above steps in each relevant area.

The process being iterative, requirements may be refined and the documentations may need to be updated at each iteration.

Details on the above process, the list of documentation relevant to demonstration of ALARP and BAT for source term and a summary of this demonstration are included in Minimisation of Radioactivity Route Map Report, Reference [D-2]."

22.5.13 Management of Source Term during GDA

In the first paragraph, between the sentence "*Source term development is very important for the UK HPR1000 GDA, affecting multiple areas, such as shielding design and radiation zoning, building layout, system and equipment design, dose assessments, decommissioning, disposability assessment, radiation monitoring and radiochemical specification.*", and the sentence "*Any design modifications affecting the source term should be registered and recorded appropriately.*", the following text is added to read:

"*The main activities relevant to source term management include:*

a) Analyse the source term users' needs;

b) Determine the content, scope and depth of source term works;

c) Build the documentation structure for source term, logically and hierarchically, and define the schedule of the documentations' issue in compliance with GDA project schedule and relevant disciplines' schedule;

d) Manage interactions between all relevant technical areas;

e) Produce and update as and when relevant the documentation and ensure its configuration control;

f) Capture and manage commitments, requirements and assumptions related to source term;

g) Interact with ONR/EA, notably through L4 meetings;

h) Handover the source term documentation and knowledge as well as related commitments, requirements and assumptions, to the future licensee."

22.10 Dose Assessment for Public from Direct Radiation

22.10.2 Dose Assessment for the Public from Direct Radiation

In the first paragraph, the sentence "*This section summarises the dose assessment for the public from direct radiation.*" is modified to read:

"*Evaluation of direct radiation dose to members of the public begins with the identification of the main target sources. The main target sources of UK HPR1000 are identified based on their potential effect on the public dose, and then the dose evaluation is carried out using UK HPR1000 specific information, such as source terms, locations of radioactive sources (distance to the site boundary) and architectural design.*"

22.10.2.1 Identification of Main Radioactive Sources

The following table "*T-22.10 1 Main Target Sources in Dose Evaluation for the Public from Direct Radiation*" is modified:

T-22.10-1 Main Target Sources in Dose Evaluation for the Public from Direct Radiation

Building	***Main Target Source***
BRX	*Reactor Core* *Steam Generators* *Main Coolant Lines*
BNX	*Coolant Storage Tanks*
BFX	*Fuel Pool Cooling and Treatment System Piping*
BWX	*Concentrate Tanks* *Spent Resin Storage Tanks*
BQZ	*Radioactive Waste Packages, including spent resin, sludge, spent filter cartridge, etc.*
BQF	*Spent Fuel Assemblies and In-Core Instrument Assemblies*

After the table "*T-22.10-1 Main Target Sources in Dose Evaluation for the Public from Direct Radiation*", the paragraph "*It is worth noting that in addition to the above-mentioned main radioactive source terms inside buildings, the transportation of radioactive materials outside the buildings on site may also cause radiation risks to the surrounding public by direct radiation exposure. Therefore, the radiation impact analysis of the transportation of major radioactive materials on site is also carried out, and the packages with higher level of radioactivity are selected to evaluate the dose of direct radiation to the public, mainly including spent filter cartridge packages, in-core instrument assembly packages and spent fuel assembly packages.*" is modified to read:

> "*In addition to the above-mentioned main radioactive sources inside buildings, the transfer of radioactive materials outside the buildings on site may also cause short-term radiation risks to members of the public by direct radiation exposure. Therefore, analysis of the direct radiation doses to members of the public associated with the transfer of major radioactive materials on site has also been carried out, based on packages with higher level of radioactivity (mainly including spent filter*

cartridge packages and spent fuel assembly packages)."

22.10.2.2 Dose Assessment

22.10.2.2.1 Input Data

In bullet point "*a) source term*", the following paragraph "*According to the analysis of the main target sources, neutrons and photons produced by chain fission at primary shielding surface, the concentration of N-16 in primary coolant, the activity of TEU [LWTS]) TES [SWTS], PTR [FPCTS] and TEP [CSTS], and the source strengths of radioactive waste packages and spent fuel assembly packages during normal operation are considered in the public dose assessment from direct radiation.*" is modified to read:

"*According to the analysis of the main target sources, the source terms are considered in the public dose assessment from direct radiation including:*

1) *the neutrons and photons at the primary shielding surface and the N-16 concentration of the steam generators and main coolant lines,*
2) *the photons strength of TEP [CSTS] coolant storage tank;*
3) *the photons strength of PTR [FPCTS] pipes;*
4) *the photons strength of TEU [LWTS]) concentrate tank and TES [SWTS] spent resin storage tank;*
5) *the photons strength of radioactive waste packages, including packages of spent resin, sludge, concentrate, dry waste, in-core instrument assemblies and spent filter cartridges; and*
6) *the spent fuel assembly and in-core instrument assembly packages.*"

After the Sub-chapter 22.10.2, a new Sub-chapter 22.10.3 titled "***Minimisation SFAIRP – Demonstration***" is added:

"***22.10.3 Minimisation SFAIRP – Demonstration***

The evaluation of public dose from direct radiation and demonstration of minimisation SFAIRP form part of the wider ALARP and BAT justification of public doses.

The UK HPR1000 design has evolved from the CPR1000 and there are a number of CPR1000 reactors which have been in operation for many years and still are. The Operating Experience (OPEX) gathered from these reactors can therefore be utilised to help judge and provide some context to the assessment of public dose from direct radiation from the UK HPR1000.

Analysis of environmental dose rate measurements from the vicinity of a representative reactor site has been performed. The analysis emphatically demonstrated that the direct radiation dose rates from the representative reactor site and adjacent units within the nuclear power complex are indistinguishable from the background radiation levels in the area.

A high-level review of the design with regard to the hierarchy of hazard controls and the Eliminate, Reduce, Isolate, Control, Personal Protective Equipment (ERIC/PPE) principles has been undertaken to determine whether any additional, reasonably practicable design changes can be made to the UK HPR1000, notably to the nuclear island buildings (BRX, BNX, BFX, BWX and safeguard building) to further reduce direct radiation dose to the public.

Whilst the detailed design of BQZ and BQF falls outside of the GDA scope, they are therefore considered within this evaluation as they are known to be major contributors to public dose from direct radiation.

Based on the scope of the design being presented for this stage of the GDA, this review yielded that there are no further reasonably practicable design changes that could be introduced at this design stage that would further reduce direct radiation public dose. The below points support this conclusion:

a) The dose to the public from direct radiation pathways evaluated for UK HPR1000 during GDA forms a part of a wider dose evaluation, where direct radiation is shown to be a much less significant dose contributor;

b) Considering this evaluation in isolation, the direct radiation public dose contribution from BRX, BNX, BFX, BWX and safeguard is minimal and hence there is very limited benefit in changing the design;

c) The majority of the public dose contribution comes from BQF and BQZ, the design and SFAIRP demonstration of which, are covered in Conceptual Proposal of ILW Interim Storage Facility, Reference [D-3] and Spent Fuel Interim Storage Facility Design, Reference [D-4];

d) Operational experience from similar reactors show that ambient dose rates measured at distances that are representative of public occupancy locations are indistinguishable from background radiation levels;

e) Following reviews of the design, no further practicable and beneficial dose reduction methods have been identified.

The overall ALARP demonstration is presented in Off-site Radiological Consequence Analysis during Normal Operation, Reference [D-5]."

22.13 Reference

The following documents are referenced and/or have been updated:

[15] General Nuclear System Limited, Pre-Construction Environmental Report Chapter 6 Quantification of Discharges and Limits, HPR/GDA/PCSR/0006, Revision 001, September 2020.

[19] CGN, Primary Coolant Source Term Methodology Report, GHX00800002DRDG03GN, Rev D, December 2019.

[20] CGN, Primary Coolant Source Term Calculation Report, GHX00800006DRDG03GN, Rev C, October 2019.

[23] CGN, Secondary Coolant Source Term Supporting Report, GHX90300004DNFP03GN, Rev D, June 2020.

[26] CGN, Activated Structures Source Term Supporting Report, GHX00800003DRDG03GN, Rev D, June 2020.

[36] CGN, Public Dose Evaluation from Direct Radiation Topic Report, GHX40200064DNFP03GN, Rev G, August 2020.

And the following references are added:

[D-1] CGN, Estimation of Radioactive Gaseous and Liquid Discharges and Limits for UK HPR1000, GHX35000002DNFP03GN, Rev E, November 2019.

[D-2] CGN, Minimisation of Radioactivity Route Map Report, GHX00100002DNHS03GN, Rev C, June 2020.

[D-3] CGN, Conceptual Proposal of ILW Interim Storage Facility, GHX00100063DNFF03GN, Rev C, December 2019.

[D-4] CGN, Spent Fuel Interim Storage Facility Design, GHX00100081DNFF03GN, Rev E, September 2020.

[D-5] CGN, Off-site Radiological Consequence Analysis during Normal Operation, GHX00530008DOHB02GN, Rev A, June 2020.

Appendix E – Amendments to PCSR Chapter 23 – Radioactive Waste Management

AMENDED CONTENT

23.1 List of Abbreviations and Acronyms

ALARP	As Low As Reasonably Practicable
APG	Steam Generator Blowdown System [SGBS]
BAT	Best Available Techniques
BNX	Nuclear Auxiliary Building
BQF	Spent Fuel Interim Storage Facility
BQS	Waste Auxiliary Building
BQZ	ILW Interim Storage Facility
BWX	Radioactive Waste Treatment Building
DAW	Dry Active Waste
DWN	Nuclear Auxiliary Building Ventilation System [NABVS]
GDA	Generic Design Assessment
GDF	Geological Disposal Facility
HAW	Higher Activity Waste
HLW	High Level Waste
ICIA	In-core Instrumentation Assembly
ILW	Intermediate Level Waste
IWS	Integrated Waste Strategy
KRT	Plant Radiation Monitoring System [PRMS]
LAW	Lower Activity Waste
LLW	Low Level Waste
LLWR	Low Level Waste Repository Ltd (UK)
LOCA	Loss of Coolant Accident
NALW	Non-aqueous Liquid Waste
NFCC	Non-fuel Core Component
PCSR	Pre-Construction Safety Report
RCCA	Rod Cluster Control Assembly

RPE	*Nuclear Island Vent and Drain System [VDS]*
RPV	*Reactor Pressure Vessel*
RWM	*Radioactive Waste Management Ltd (UK)*
SCCA	*Stationary Core Component Assembly*
SEL	*Conventional Island Liquid Waste Discharge System [LWDS (CI)]*
SGTR	*Steam Generator Tube Rupture*
SRE	*Sewage Recovery System [SRS]*
TEG	*Gaseous Waste Treatment System [GWTS]*
TER	*Nuclear Island Liquid Waste Discharge System [NLWDS]*
TES	*Solid Waste Treatment System [SWTS]*
TEU	*Liquid Waste Treatment System [LWTS]*
UK HPR1000	*UK version of the Hua-long Pressurised Reactor*
VLLW	*Very Low Level Waste (a sub-category of LLW)*
WAC	*Waste Acceptance Criteria*

System codes (XXX) and system abbreviations (YYY) are provided for completeness in the format (XXX [YYY]), e.g. Nuclear Island Vent and Drain System (RPE [VDS]).

23.6 Liquid Radioactive Waste Management

23.6.2 Nuclear Island Vent and Drain System (RPE [VDS])

23.6.2.1 Safety Function Requirements

In the bullet point "*c) Confinement*", the following paragraphs:

"*RPE [VDS] collects and contains radioactive effluents in the nuclear island and prevents their leakage under normal operation.*

RPE [VDS] containment isolation valves are designed to provide the following functions to prevent leakage from containment building:

1) *Containment isolation in accident conditions;*
2) *Containment leak tightness in severe accident conditions; and*
3) *In the case of LOCA, isolation of RPE [VDS] in the Reactor Building (BRX) prevents spread of radioactive effluents towards other buildings during shutdown state.*"

are modified to read:

"*RPE [VDS] contributes to the confinement of radioactive material as follows:*

1) *RPE [VDS] containment isolation valves are designed to provide the following functions to prevent leakage from containment building:*
   - *Containment isolation in accident conditions;*
   - *Containment leak tightness in severe accident conditions; and*
   - *In the case of LOCA, isolation of RPE [VDS] in the Reactor Building (BRX) prevents spread of radioactive effluents towards other buildings during shutdown state.*
2) *Under normal operation, RPE [VDS] contributes to the confinement of radioactive material, in terms of collecting and containing radioactive effluents in the nuclear island and minimising the radioactivity discharges to the environment by preventing the spread of radioactive effluents through leak tightness, segregating and transferring them for appropriate treatment.*"

23.6.2.4 Preliminary Design Substantiation

23.6.2.4.1 Compliance with Design Requirements

In the bullet point "*e) Decommissioning*", the sentence "*Facilitating decommissioning is considered in the design of RPE [VDS] by applying the design measures described in Sub-chapter 23.2.5.*" is modified to read:

"*Requirement for facilitating decommissioning is considered in the design of RPE [VDS] by applying the design principles that are in accordance with the relevant requirements described in Sub-chapter 23.2.5, including reducing residual radioactive sources through adequate emptying provisions, decontamination provisions, equipment structure design, layout of equipment and pipelines, use of liners in sumps, minimising embedded pipes and adequately designing the unavoidable ones, etc., so as to facilitate decommissioning operations and reduce the accumulation of radioactive waste that will require management during decommissioning.*"

23.6.3 Liquid Waste Treatment System (TEU [LWTS])

23.6.3.1 Safety Function Requirements

In the bullet point "*c) Confinement*", the sentence "*TEU [LWTS] contributes to the confinement of radioactive material in normal operation.*" is modified to read:

"*TEU [LWTS] contributes to the confinement of radioactive material in normal operation, by containing the liquid radioactive waste conveyed and minimising the radioactivity discharges to the environment through segregated storage, treatment and monitoring of the liquid radioactive waste.*"

23.6.3.2 Role of the System

The following two sentences "*TEU [LWTS] provides separately storage, treatment and monitoring of the non-recyclable liquid waste collected in RPE [VDS] and SRE [SRS]. TEU [LWTS] performs the following operational functions:*" are modified to read:

> "*TEU [LWTS] provides temporary storage, treatment and monitoring for the non-recyclable liquid waste collected in RPE [VDS] and SRE [SRS] and contributes to the confinement of the liquid waste and to achieving an optimal balance between radioactive waste discharges and solid radioactive waste arising by performing the following operational functions:*"

23.6.3.3 System Description and Operation

23.6.3.3.1 System Description

The sentence "*It is noted that the future operator will determine the final optimum processing techniques for liquid radioactive waste and demonstrate that such proposals represent BAT and ALARP.*" in the second paragraph is removed.

In the bullet point "*a) Liquid Waste Storage Subsystem*", after the paragraph "*For each type of storage tanks, there is always one of them on receiving status. After a storage tank is filled up, it will be mixed and then sampled.*", the following paragraph is added:

> "*The tanks of the liquid radioactive waste management systems have been sized to provide sufficient capacity to enable safe, optimised and flexible management for all the liquid waste anticipated to be produced by the UK HPR1000 during normal operation, including expected events/anticipated occurrences. Considerations have notably been given to:*
>
> *1) Minimisation of discharges and secondary waste generation, by providing sufficient capacity for the operator to make informed decisions with respect to which treatment to apply and to whether additional treatment is needed to further improve the quality of the waste to be discharged while not detrimentally impact solid radioactive waste quality;*
>
> *2) Minimisation of accumulation of the liquid radioactive waste on-site, by not oversizing tanks.*
>
> *Detailed information and justification are presented in Reference [E-1].*"

23.6.3.4 Preliminary Design Substantiation

23.6.3.4.2 Compliance with Design Requirements

In the bullet points "*b) Engineering Design Requirements*" and "*4) Fail-safe*", the word "*RPE [VDS]*" in the second sentence is modified to read:

> "*TEU [LWTS]*".

In the bullet point "*e) Decommissioning*", the sentence "*Facilitating decommissioning is considered in the design of TEU [LWTS] by applying the design measures described in Sub-chapter 23.2.5.*" is modified to read:

> "*Requirement for facilitating decommissioning is considered in the design of TEU [LWTS] by applying the design principles that are in accordance with the relevant requirements described in Sub-chapter 23.2.5, including reducing residual radioactive sources through appropriate emptying provisions, decontamination provisions, equipment structure design, layout of equipment and pipelines, etc., so as to facilitate decommissioning operations and reduce the accumulation of radioactive waste that will require management during decommissioning.*"

23.6.4 Nuclear Island Liquid Waste Discharge System (TER [NLWDS])

23.6.4.1 Safety Functional Requirements

In the bullet point "*c) Confinement*", the following text:

"*TER [NLWDS] performs following confinement functions:*

1) To contain the radioactivity liquid waste; and

2) To prevent unqualified liquid waste released into the environment."

is modified to read:

> "*TER [NLWDS] contributes to the confinement of radioactive material in normal operation, by containing the liquid radioactive waste conveyed and preventing release of unqualified liquid waste into the environment.*"

23.6.4.2 Role of the System

The following text:

"*TER [NLWDS] collects liquid waste from nuclear island, and discharges it to the environment under monitoring after mixing, sampling and analysis.*

TER [NLWDS] performs the following operational functions:"

is modified to read:

> "*TER [NLWDS] provides temporary storage, monitoring and control of the treated liquid waste from nuclear island and contributes to confinement of the liquid waste and control of radioactive waste discharges by performing the following operational functions:*"

23.6.4.3 System Description and Operation

23.6.4.3.1 System Description

The bullet point "*e) The common discharge piping fitted with an online Plant Radiation*

Monitoring System (KRT [PRMS]) monitor;" is modified to read:

"*e) The common discharge piping fitted with a flow proportional sampler and an online Plant Radiation Monitoring System (KRT [PRMS]) monitor;*"

23.6.4.3.2 Description of Main Equipment

In the second paragraph, after the sentence "*The liquid waste collected in the sumps is routed to the liquid waste storage tanks by the sump pumps.*", the following sentence is added:

"*The flow proportional sampler positioned on the discharge pipe is used to obtain respective sample of the actual discharged liquid waste.*"

23.6.4.3.3 Description of System Interfaces

After the bullet point "*d) PTR [FPCTS] ……*", the following bullet point is added:

"*e) KRT [PRMS]*

The liquid waste discharged by TER [NLWDS] is continuously monitored by KRT [PRMS]."

23.6.4.4 Preliminary Design Substantiation

23.6.4.4.1 Compliance with Design Requirements

In the bullet point "*e) Decommissioning*", the sentence "*Facilitating decommissioning is considered in the design of TER [NLWDS] by applying the design measures described in Sub-chapter 23.2.5.*" is modified to read:

"*Requirement for facilitating decommissioning is considered in the design of TER [NLWDS] by applying the design principles that are in accordance with the relevant requirements described in Sub-chapter 23.2.5, including reducing residual radioactive sources through emptying provisions, equipment structure design, layout of equipment and pipelines, etc., so as to facilitate decommissioning operations and reduce the accumulation of radioactive waste that will require management during decommissioning.*"

23.6.5 Sewage Recovery System (SRE [SRS])

23.6.5.1 Safety Functional Requirements

In the bullet point "*c) Confinement*", the sentence "*SRE [SRS] contributes to the achievement of the confinement of radioactive material in normal operation.*" is modified to read:

"*SRE [SRS] contributes to the confinement of radioactive material in normal operation, in terms of containing the liquid radioactive waste conveyed and minimising the radioactivity discharges to the environment by preventing the spread*

of radioactive liquid waste through leak tightness, and by appropriately segregating and transferring them for appropriate treatment."

23.6.5.2 Role of the System

The first sentence "*In normal operation, SRE [SRS] performs the following functions:*" is modified to read:

"*SRE [SRS] collects the liquid waste from the waste management and decontamination areas and contributes to confinement of the liquid waste and prevention of the spread radioactive waste by performing the following operational functions:*"

23.6.5.4 Preliminary Design Substantiation

23.6.5.4.1 Compliance with Design Requirements

In the bullet point "*e) Decommissioning*", the sentence "*Facilitating decommissioning is considered in the design of SRE [SRS] by applying the design measures described in Sub-chapter 23.2.5.*" is modified to read:

"*Requirement for facilitating decommissioning is considered in the design of SRE [SRS] by applying the design principles that are in accordance with the relevant requirements described in Sub-chapter 23.2.5, including reducing residual radioactive sources through emptying provisions, decontamination provisions, equipment structure design, layout of equipment and pipelines, and minimising embedded pipes and adequately designing unavoidable ones, etc., so as to facilitate decommissioning operations and reduce the accumulation of radioactive waste that will require management during decommissioning.*"

23.6.6 Conventional Island Liquid Waste Discharge System (SEL [LWDS (CI)])

23.6.6.1 Safety Functional Requirements

In the bullet point "*c) Confinement*", the following text:

"*SEL [LWDS (CI)] performs following confinement functions:*

1) It is designed to contain the radioactivity liquid waste; and

2) It is designed to prevent unqualified liquid waste released into the environment."

is modified to read:

"*SEL [LWDS (CI)] contributes to the confinement of radioactive material in normal operation, by containing the liquid radioactive waste conveyed and preventing release of unqualified liquid waste into the environment.*"

23.6.6.2 Role of the System

The following text:

"*SEL [LWDS (CI)] collects liquid waste from conventional island, and discharges it to the environment under control.*

SEL [LWDS (CI)] performs the following operational functions:"

is modified to read:

> "*SEL [LWDS (CI)] provides temporary storage, monitoring and control of the liquid waste from the conventional island and contributes to confinement of the liquid waste and control of potential radioactive waste discharges by performing the following operational functions:*"

23.6.6.3 System Description and Operation

23.6.6.3.1 System Description

The bullet point "*e) The common discharge piping fitted with an online KRT [PRMS] monitor;*" is modified to read:

> "*e) The common discharge piping fitted with a flow proportional sampler and an online KRT [PRMS] monitor;*"

23.6.6.3.2 Description of Main Equipment

In the second paragraph, after the sentence "*The liquid waste collected in the sumps is routed to the liquid waste storage tanks by the sump pumps.*", the following sentence is added:

> "*The flow proportional sampler positioned on the discharge pipe is used to obtain respective sample of the actual discharged liquid waste.*"

23.6.6.3.3 Description of System Interfaces

After the following bullet point "*b) APG [SGBS] ……..*", the following two bullet points are added:

> "*c) TEU [LWTS]/TER [NLWDS]*
>
> *Radioactive liquid waste in SEL [LWDS (CI)] that is not appropriate for discharge is sent to TEU [LWTS] for treatment or TER [NLWDS] for storage before discharge.*
>
> *d) KRT [PRMS]*
>
> *The liquid waste discharged by SEL [LWDS (CI)] is continuously monitored by KRT [PRMS].*"

23.6.6.4 Preliminary Design Substantiation

23.6.6.4.2 Compliance with Design Requirements

In the bullet point "*e) Decommissioning*", the sentence "*Facilitating decommissioning is considered in the design of SEL [LWDS (CI)] by applying the design measures described in Sub-chapter 23.2.5.*" is modified to read:

> "*Requirement for facilitating decommissioning is considered in the design of SEL [LWDS (CI)] by applying the design principles that are in accordance with the relevant requirements described in Sub-chapter 23.2.5, including reducing residual radioactive sources through emptying provisions, equipment structure design, layout of equipment and pipelines, etc., so as to facilitate decommissioning operations and reduce the accumulation of radioactive waste that will require management during decommissioning.*"

23.7 Gaseous Radioactive Waste Management

23.7.2 Gaseous Waste Treatment System (TEG [GWTS])

23.7.2.1 Safety Functional Requirements

In the bullet point "*c) Confinement*", the following text:

"*TEG [GWTS] contributes to the confinement as follows:*

1) *During the accident condition, the containment isolation valves of TEG [GWTS] are closed according to safety signals or manually;*

2) *TEG [GWTS] stores and transfers gaseous radioactive waste, so it is designed to prevent gaseous radioactive waste escaping from the equipment and connecting.*"

is modified to read:

> "*TEG [GWTS] contributes to the confinement of radioactive material as follows:*
>
> 1) *Under accident condition, the containment isolation valves in TEG [GWTS] are closed automatically or manually upon relevant safety signals; and*
>
> 2) *Under normal operation, TEG [GWTS] contains gaseous radioactive waste conveyed and minimises the radioactivity levels of discharges to the environment through treatment of the gaseous radioactive waste.*"

23.7.2.2 Role of the System

The sentence "*TEG [GWTS] performs the following operational functions:*" is modified to read:

> "*TEG [GWTS] contributes to confinement of the gaseous waste and minimisation of radioactive waste discharges by performing the following operational functions:*"

23.7.2.3 System Description and Operation

23.7.2.3.1 System Description

The sentence "*It is noted that the future operator will determine the final optimum processing technique for gaseous radioactive waste and demonstrate that such proposals represent BAT and ALARP.*" in the first paragraph is removed.

In the bullet point "*c) Gas Distribution Unit*", the sentence "*The gas distribution unit draws out the hydrogen, oxygen and radioactive gases by continuous flushing, maintains the hydrogen/oxygen concentration and prevents gas released to the building.*" is modified to read:

> "*The gas distribution unit draws out the hydrogen, oxygen and radioactive gas from the connected components by continuous flushing and maintains the operation pressure of the connected component at slightly negative atmosphere to prevent gas escaping from the component.*"

In the bullet point "*f) Decay Unit*", the sentence "*The sizing of activated charcoal delay beds is presented in Reference [47].*" in the first paragraph is removed.

In the bullet point "*f) Decay Unit*", after the sentence "*The decay unit consists of one silica gel dryer, three delay activated carbon beds, sampling lines, discharging line and monitoring components.*", the following paragraph is added:

> "*The activated charcoal delay beds have been sized to provide sufficient capacity to enable safe and optimised management of the targeted noble gases (krypton and xenon). Considerations have notably been given to:*
>
> *1) Minimisation of discharges and secondary waste generation, by providing sufficient capacity for delaying the targeted noble gases (krypton and xenon) to achieve natural decay in the all normal operating conditions;*
>
> *2) Minimisation of accumulation of the gaseous radioactive waste on-site, by optimisation of the configuration of the delay beds.*
>
> *Detailed information and justification are presented in Reference [47].*"

23.7.2.4 Preliminary Design Substantiation

23.7.2.4.2 Compliance with Design Requirements

In the bullet point "*e) Decommissioning*", the sentence "*Facilitating decommissioning is considered in the design of TEG [GWTS] by applying the design measures described in Sub-chapter 23.2.5.*" is modified to read:

> "*Requirement for facilitating decommissioning is considered in the design of TEG [GWTS] by applying the design principles that are in accordance with the relevant requirements described in Sub-chapter 23.2.5, including reducing residual*

radioactive sources through adequate emptying provisions, decontamination provisions, equipment structure design, layout of equipment and pipelines, etc., so as to facilitate decommissioning operations and reduce the accumulation of radioactive waste that will require management during decommissioning."

23.8 Solid Radioactive Waste Management

23.8.1 Waste Arising

In the following table "*T-23.8-1*", the "*Description*" of "*Oil*" and "*Organic solvent*" and the "*Category*" of "*In-core Instrumentation Assemblies (ICIAs)*" and "*Rod Cluster Control Assemblies (RCCAs) and Stationary Core Component Assemblies (SCCAs)*" are modified.

T-23.8-1 Solid Waste and NALW Generated during the Operation

No.	Title	Description	Category
1	Spent resins	Arising from the TEU [LWTS], TEP [CSTS], PTR [FPCTS], RCV [CVCS] demineralisers, and APG [SGBS] demineralisers under steam generator tubes rupture condition.	ILW
2	Low activity spent resins	Arising from APG [SGBS] demineralisers under normal operational condition.	LLW
3	Concentrates	Arising from TEU [LWTS] evaporators.	ILW/LLW
4	Spent filter cartridges	Arising from filter changing in TEU [LWTS], TEP [CSTS], PTR [FPCTS], RCV [CVCS], RPE [VDS] and APG [SGBS].	ILW/ LLW
5	Dry Active Waste (DAW)	Contaminated personal protection equipment, monitoring swabs, plastic, clothing, contaminated tools, waste charcoal generated from iodine absorbers in HVAC systems, etc.	ILW/LLW
6	Sludge	Arising from the sumps and tanks in the liquid radioactive waste management systems (e.g. RPE [VDS] and TEU [LWTS]).	ILW/LLW
7	Oil	Arising during normal operation, such as maintenance of pumps and hydraulic equipment.	LLW/VLLW

No.	Title	Description	Category
8	Organic solvent	Arising during normal operation notably from decontamination operations, such as decontamination of Reactor Pressure Vessel (RPV) bolts and other components.	LLW/VLLW
9	Ventilation filter cartridges	Arising from the ventilation systems located in the BNX, BFX, BSX, BRX and BWX.	LLW
10	NFCCs	In-core Instrumentation Assemblies (ICIAs), arising from reactor core, using for measuring water level, temperature and neutron in the reactor core.	HLW/ILW *1
		Rod Cluster Control Assemblies (RCCAs) and Stationary Core Component Assemblies (SCCAs) activated in the reactor core.	HLW

Note *1: The upper part of each ICIA is categorized as LLW after being cut.

23.8.3 Solid Waste Treatment System (TES [SWTS])

23.8.3.1 Safety Functional Requirements

In the bullet point "*c) Confinement*", the sentence "*TES [SWTS] contributes to the confinement of radioactive material in normal operation.*" is modified to read:

> "*TES [SWTS] contributes to the confinement of radioactive material in normal operation, by containing the solid radioactive waste conveyed and minimising the radioactive waste accumulation on-site through appropriate provisions for characterisation and segregation, treatment, conditioning, packaging and storage of radioactive solid waste and Non-aqueous Liquid Waste (NALW) to enable their safe and optimised off-site disposal at the earliest opportunity.*"

23.8.3.2 Role of the System

The following text:

"*TES [SWTS] serves to collect, characterise and segregate, treat, condition, package and store various types of solid radioactive waste and NALW generated in normal operation.*

TES [SWTS] performs the following operational functions:"

is modified to read:

"*TES [SWTS] serves to collect, characterise and segregate, treat, condition, package and store various types of solid radioactive waste and NALW generated in normal operation and contributes to confinement and minimisation of radioactive waste of the radioactive waste and minimising radioactive waste by performing the following operational functions:*"

23.8.3.3 System Description and Operation

23.8.3.3.1 System Description

The Sub-chapter "*23.8.3.3.1 System Description*" is modified to read:

"*The management strategy as well as the treatment/conditioning operation for the solid radioactive waste and NALW produced during operation is illustrated in F-23.8.1 and presented as follows.*

a) Spent Resin

Spent resins are generated from demineralisers that are used to purify reactor coolant in the RCV [CVCS], PTR [FPCTS] and TEP [CSTS], treat liquid waste in the TEU [LWTS] and purify the blow-down of the steam generators in the APG [SGBS]. The resins are to be replaced if efficiency drops below defined threshold (operator specific), pressure differential exceeds the set threshold (manufacturer specific) or resins service lifetime is exceeded (manufacturer specific). The generated spent resins are segregated according to the sources and characteristics to facilitate subsequent processing: ILW spent resins from RCV [CVCS], PTR [FPCTS], TEP [CSTS] and TEU [LWTS] demineralisers are collected and managed separately from LLW spent resins from APG [SGBS] demineralisers. Spent resins generated from APG [SGBS] demineralisers might be ILW under special conditions (such as the Steam Generator Tube Rupture (SGTR)). In such circumstances they are managed together with the other ILW spent resins generated by the other systems.

The processing techniques for spent resins have been optimised in the generic design of the UK HPR1000 through an optioneering process, considering reducing relevant risks to ALARP and minimising impacts on the public and the environment through the use of BAT. Detailed information is presented in the 'Optioneering Report for Operational Solid Waste Processing Techniques', Reference [54].

Based on the outcomes from the optioneering study, the spent resins are managed as follows:

1) ILW spent resin

Four tanks are used to receive and store the ILW spent resins, including two spent resin tanks located in the BNX and two spent resin storage tanks in the BWX. Spent resins from RCV [CVCS], PTR [FPCTS] and TEP [CSTS] demineralisers (in the BNX) are flushed by the spent resin flush pump into spent resin storage tanks located in the BNX, where these spent resins are stored for a period of time and then are transferred by pump to the spent resin storage tanks located in the BWX for further treatment. Spent resins from TEU [LWTS] demineralisers (in the BWX) are flushed by the spent resin transfer pump into spent resin storage tanks located in the BWX for storage and treatment.

Before conditioning, the spent resins in the spent resin storage tank are characterised by sampling them via the sampler equipped on the recirculation line of the spent resin storage tank and sending samples for laboratory analysis to obtain their properties (such as radioactivity content, the chemicals concentration, etc.). After characterisation, the spent resins are transferred by the spent resin metering pump into the spent resin metering tank where they are dewatered by dewatering pump to measure the waste loading volume. The measured resins are discharged by gravity or water flushing into 500 litre robust shielded drum (e.g. Mosaik container) where the mobile de-watering device is used to reduce the 'free water' content from the resins. De-watering is performed in two steps to meet the target of less than 1% by volume of 'free water' in the spent resin package.

The produced ILW spent resins packages are transferred to the BQZ for interim storage pending availability of the GDF.

2) LLW spent resin

LLW spent resins generated from APG [SGBS] demineralisers (located in the BNX) are flushed into the low activity spent resin separation tank located in the BNX for dewatering. The spent resins are characterised by sampling them from the low activity spent resin separation tank and sending samples for laboratory analysis to obtain their properties (such as radioactivity content, the chemicals concentration, etc.). After dewatering, the spent resins are loaded into the 210 litre drum via the vacuum suction device.

The produced LLW spent resins packages are transferred to the BQS for buffer storage (short time) prior to transfer off-site to the incineration facility.

Under special conditions (such as in case of SGTR), the spent resins from the APG [SGBS] demineralisers are anticipated to be ILW and are, in such cases, flushed into the spent resin storage tanks in the BNX and treated as

ILW spent resins generated by the other systems.

The spent resin storage tanks have been sized to provide sufficient capacity to enable safe, optimised and flexible management of all the spent resins anticipated to be produced by the UK HPR1000 during normal operation, including expected events/anticipated occurrences. Considerations have notably been given to:

1) *Minimisation of discharges and secondary waste generation, by enabling there is sufficient capacity for segregation, storage and appropriate treatment;*

2) *Minimisation of accumulation of the spent resins on-site, by not oversizing tanks.*

Detailed information and justification are presented in Reference [55].

b) *Concentrates*

Concentrates are generated from the TEU [LWTS] evaporator that is used to treat liquid waste. The concentrates are characterised by sampling them from the TEU [LWTS] evaporator and sending samples for laboratory analysis to obtain their properties (such as radioactivity content, the boron concentration, etc.). After characterisation, when appropriate, the concentrates are discharged into the TEU [LWTS] concentrates tank.

When the operator decides to condition/package, the concentrates, they are transferred to the metering tank for volume measurement and the appropriate volume is discharged into the 210 litre drum. The 210 litre drum with concentrates is transferred by rollers to the mixing station to be filled with lime. Using an in-drum mixer, the concentrates and lime are mixed sufficiently to allow the lime to react with the boric acid. The cement is then added to immobilise the waste. The waste package is firstly sealed under the pneumatic covers for initial cure and then the cement grouting caps are added. Finally the package is sealed with lid and transferred to the relevant on-site storage facility.

The processing technique for concentrates has been optimised in the generic design of the UK HPR1000 through an optioneering process, considering reducing relevant risks to ALARP and minimising impacts on the public and the environment through the use of BAT. Detailed information is presented in the 'Optioneering Report for Operational Solid Waste Processing Techniques', Reference [54].

Produced LLW concentrates packages are transferred to the BQS for short term storage prior to disposal off-site. Waste packages that are regarded as ILW/LLW

boundary waste are transferred to the BQZ for decay storage and are transported to off-site disposal facility after they have been confirmed to have decayed to LLW.

c) Spent Filter Cartridge

Spent filter cartridges are generated from filters that are used to purify water and/or treat liquid waste in the TEP [CSTS], PTR [FPCTS], RCV [CVCS], RPE [VDS], APG [SGBS] and TEU [LWTS]. These spent filter cartridges are segregated into ILW and LLW according to their characteristics to facilitate subsequent processing.

When the pressure differential between the inlet and outlet of the filters reaches a pre-determined value or the surface dose rate on filters reaches the set limit, the filter cartridges are to be replaced. A spent filter cartridge changing machine located in the BNX is used to replace the spent filter cartridges for the RCV [CVCS], PTR [FPCTS], TEP [CSTS] and RPE [VDS] filters (in the BNX) with new ones automatically. Another spent filter cartridge replacement and transfer device located in the BWX is used to remove the spent filter cartridges for the TEU [LWTS] filters. The two equipment are designed to provide shielding and remote control to reduce the dose to operators. When a filter cartridge is lifted out, it is characterised through measuring its surface dose rate to enable its segregation into ILW or LLW and facilitate the subsequent management.

The ILW spent filter cartridge is temporarily stored in BWX for batch processing and then retrieved into 3 cubic metre box and immobilised with cement grout. The temporary storage area for spent filter cartridges is provided with sufficient capacity to store the anticipated annual waste volume of one unit. This approach allows for different dose rate cartridges to be loaded into one box and reduces the risk of producing out of specification waste packages. LLW filter cartridge is packaged in 210 litre drum. The treatment technique for spent filter cartridges has been optimised, Reference [54], and the optimised disposal container for ILW spent filter cartridges has been selected, Reference [E-2], in the generic design of the UK HPR1000, considering reducing relevant risks to ALARP and minimising impacts on the public and the environment through the use of BAT.

The produced ILW spent filter cartridges packages are transferred to the BQZ for interim storage pending availability of the GDF. The produced LLW spent filter cartridges packages are transferred to the BQS for buffer store before dispatch to off-site treatment facility.

d) Dry Active Waste

The DAW is characterised and collected into different colour bags at source based on the contamination level, and therefore the active waste and non-active waste are segregated to reduce the volume of DAW. The various types of DAW are presented in T-23.8-1.

Following characterisation and segregation at source, the DAW is transferred to the Waste Auxiliary Building (BQS) for further segregation to facilitate subsequent management. To achieve the best use of existing off-site infrastructure services in the UK, including metal melting, incineration, super-compaction and disposal services, an optioneering study for the management of DAW has been undertaken and is presented in the 'Optioneering Report for Operational Solid Waste Processing Techniques', Reference [54]. Based on the outcomes from the optioneering study, the DAW is decided to be segregated into metal waste, combustible waste, non-combustible and compactible waste, non-combustible and non-compactable waste for further management ensuring the best use of off-site infrastructures.

The DAW is dried firstly in the BQS if it contains free liquid. The drums are then transferred to the sorting box for further sorting. Size reduction is carried out for large size waste before packaging. After segregation, different types of the DAW are packaged into different containers as follows:

1) *The metal waste is loaded into metallic box (e.g. Berglof box);*
2) *The combustible waste is loaded into solid 210 litre drums;*
3) *The non-combustible and compactible waste is loaded into super-compactible 210 litre drums;*
4) *The non-combustible and non-compactible waste (such as contaminated concrete) is loaded into 210 litre drums and then immobilised with cement grout;*
5) *The DAW that is identified as ILW/LLW boundary waste is packaged into 210 litre drum with shielding cask for subsequent handling, if necessary, and then the drum is placed into stillage for decay storage in the BQZ. After it has been confirmed to have decayed to LLW, it is retrieved and sent to BQS for segregation to facilitate off-site processing.*

The produced LLW DAW packages are stored in the BQS for buffer store before dispatch to off-site infrastructures for treatment or disposal.

e) Sludge

The sludge is collected, segregated and characterised by taking samples at the generation point and before conditioning/packaging and sending samples for

laboratory analysis to obtain their properties. After segregation and characterisation, the sludge is immobilised in 210 litre drum by mixing with cement.

Produced LLW sludge packages are transferred to the BQS prior to disposal off-site. Waste packages that are regarded as ILW/LLW boundary waste are transferred to the BQZ for decay storage and are transported to off-site disposal facility when they have been confirmed to have decayed to LLW.

f) Non-aqueous Liquid Waste (NALW)

The NALW, i.e. oil and solvent generated from maintenance and decontamination activities, is collected, segregated and characterised by taking samples at the generation point and before packaging and sending samples for laboratory analysis to obtain their properties. Oil and solvent are packaged in 210 litre drums. The filled drums are sealed and then stored in the buffer store area in the BQS prior to transfer off-site to the incineration facility.

g) Ventilation Filter Cartridge

The ventilation filter cartridges are generated from air filters that are used to treat gaseous waste in the Heating, Ventilation and Air Conditioning (HVAC) systems. When removed, the spent ventilation filter cartridges are characterised by dose rate measurement. Then, they are packaged in bags (or in 210-litre drum) and transferred to the BQS for buffer store prior to transfer to off-site infrastructures for super-compaction.

h) Non-fuel Core Component (NFCC)

Spent NFCC consists typically of activated metal components used inside the nuclear reactor core that have been subject to irradiation or exposure to intense neutron flux, and includes spent ICIAs, RCCAs and SCCAs. The management strategy of spent NFCCs has been developed in the generic design of the UK HPR1000 through an optioneering process, considering reducing relevant risks to ALARP and minimising impacts on the public and the environment through the use of BAT. Detailed information is presented in the 'Management Proposal of Waste Non-Fuel Core Components', Reference [56].

Based on the outcomes from the optioneering study, the spent NFCCs are decided to be managed as follows:

1) ICIAs

When removing from the Reactor Pressure Vessel (RPV), the spent ICIAs are expected to be HLW or ILW (when considered as a whole piece) regarding to the total radioactivity and decay heat. Indeed, the degree of activation of ICIAs is variable, dependent on the position in the reactor core. To

optimise use of UK disposal and treatment facilities, the upper parts that are expected to be LLW are segregated from the rest of the ICIA by cutting from the ICIA manually, using shears, and are then treated as LLW DAW (see DAW). The remaining parts that are expected to be HLW or ILW are extracted from the RPV and bundled up by a winding machine. The winding machine containing the bundles of ICIAs is then lifted by the crane and unloaded into a 500 litre robust shielded drum. The winding machine provides sufficient shielding to reduce the dose to operators. The 500 litre robust shielded drum provides sufficient shielding to allow the waste to be transferred out of the reactor building to on-site interim storage facility.

The produced ILW ICIAs packages are transferred to the BQZ for interim storage prior to final disposal at GDF. The produced HLW ICIAs packages are transferred to the BQF for a decay storage period and are transferred to the BQZ when they have been confirmed to have decay to ILW, for interim storage prior to final disposal at GDF.

2) RCCAs and SCCAs

During the refuelling operation, the RCCAs/SCCAs inserted in the fuel assemblies are transferred to the spent fuel pool together with the fuel assemblies. The RCCAs/SCCAs that have reached their service lifetime are rearranged, as necessary, into the target spent fuel assemblies and stored together with spent fuel assemblies in the spent fuel pool for a given period time. The information on the refuelling operation is presented in PCSR Sub-chapters 28.2.1 and 28.4. The safety assessment relevant to co-storage of the RCCAs and SCCAs with spent fuel in the spent fuel pool is presented in the PCSR Sub-chapter 28.6.

After co-storage with the spent fuel in the spent fuel pool, the RCCAs/SCCAs are packaged together with the spent fuel and then transferred to the BQF for interim storage prior to disposal at GDF. Detailed information is presented in PCSR Sub-chapter 29.6."

23.8.3.3.2 Description of Main Equipment

The Sub-chapter "*23.8.3.3.2 Equipment Description*" is modified to read:

"*The main equipment of TES [SWTS] is arranged in four buildings: BNX, BWX, BQS and BQZ.*

a) Tanks

1) ILW spent resin tank

Tanks that are used to receive and store spent resins are made of stainless steel.

Two spent resin storage tanks are located in the BNX to receive the spent resins generated from the RCV [CVCS], PTR [FPCTS], TEP [CSTS] and APG [SGBS] (under special condition for the later, e.g. SGTR) demineralisers, and two spent resin storage tanks are located in the BWX to receive and temporarily store the spent resins transferred from spent resin storage tanks in the BNX and the spent resins from the TEU [LWTS] demineralisers.

The spent resin storage tanks are equipped with resin inlet and outlet nozzles, level measuring nozzle, overflow nozzles, as well as pipelines to provide circulating water or water loosening the spent resins.

A spent resin metering tank, also made of stainless steel, is located in the BWX. This tank is designed to dewater and measure the quantity of the resins to be treated and transfer the measured spent resin into waste containers.

2) LLW spent resin tank

A low activity resin separation tank is located in the BNX to receive and temporarily store the spent resins with low activity generated from APG [SGBS]. The bottom of the tank is equipped with a sectional area size sieve for dewatering the resins.

b) Spent resin pump

The spent resin flushing pump, a centrifugal pump, is used to flush the spent resins from the RCV [CVCS], PTR [FPCTS] and TEP [CSTS] demineralisers into the BNX spent resin storage tanks and transfer the spent resins between these two tanks.

The spent resin deliver pump, a screw pump, is used to deliver the spent resins from the BNX spent resin storage tank to the BWX spent resin storage tank.

The spent resin transfer pump, a centrifugal pump, is used to flush the spent resins from the TEU [LWTS] demineraliser into the BWX spent resin storage tank.

The spent resin metering pumps is used to transfer the spent resins from BWX spent resin storage tank to spent resin metering tank and also for the circulation of the spent resin storage tank.

The resin de-watering pumps are used to de-water the spent resins for measurement into the spent resin metering tank and pump the water to discharge the measured resins from the spent resin metering tank to 500 litre robust shielded drum.

c) Vacuum suction device

The vacuum suction device, a mobile device, is used to load the LLW spent resins from the low activity spent resin separation tank into the 210 litre drum. It is composed of suction pipe, pre-separator, industrial vacuum device, handcart and other components. When it works, the vacuum device produces negative pressure and connects with various pipe sections and the pre-separator. As such, the suction device will draw the resins from the separation tank and release them into the drum.

d) Resin sampler

The resin sampler is used to sample the spent resin automatically by a remote operator station. It is composed of a sampler, sample bottle shielding cask, mobile cart, sampler enclosure, control panel and other connection valves and pipes. The sampler is a "T" type sampler, which is installed on the recirculation line of the BWX spent resin storage tank.

e) Spent filter cartridge changing machine

The spent filter cartridge changing machine is located in the BNX. It is designed with appropriate shielding and remote control to reduce doses to workers. This machine is installed with two dose rate measurement holding devices which allow the measurement of dose rate of the spent filter cartridges and facilitate their segregation and subsequent treatment.

f) Spent filter replacement and transfer device

The spent filter replacement and transfer device is located in the BWX. It is used to change the spent filter cartridges in TEU [LWTS] and load them into drums. This device provides complete enclosure of the spent filter cartridge in a bell shaped design comprising shielding material and filter cartridge handling equipment, to reduce doses to workers. Dose monitoring is conducted by long pole instrument.

A mobile bottom door is set on the bottom of this device in order to facilitate to grab and release the filter cartridge. The device can only change and transfer one set of spent filter cartridge once and can be adapted to all filters in TEU [LWTS].

g) Encapsulation Facility

The encapsulation facility is located in the BWX, and is designed to facilitate immobilising the concentrate, sludge and ILW filter cartridges in the waste container.

1) Filter cartridge retrieval device

The filter cartridge retrieval device is equipped with specific grab and used

to retrieve the cartridge from the shielding cask to the storage area and retrieve the cartridge from the storage area into the disposal container automatically.

2) Concentrate metering tank

The concentrates metering tank is manufactured with stainless steel. It is located in the BWX.

This tank is designed to measure the volume of concentrates from TEU [LWTS] to be transferred to waste containers for cement in-drum mixing.

3) In-drum mixer

The in-drum mixer is composed of mixing motor and other components. It is used to connect with the sacrificial paddle within the drum and mix the concentrates or sludge with lime, cement and additives in drum to form a homogeneous product.

4) Mobile grouting device

The mobile grouting device is used to immobilise the ILW spent filter cartridges with cement grout and provide cement grouting caps in the encapsulated concentrate and sludge waste packages. It is a mobile continuous mixer, and consists of a cement hopper, mixer, a control cabinet, hoses and couplings. The cement hopper is equipped with a level switch and a vibrator is used to load dry cement powder. The grout produced by the mixer is transferred through hoses to the waste containers placed in the encapsulation facility.

Auxiliary equipment (such as cranes, rollers, transfer trolley, cement delivery devices, additive metering tank, lidding robotic manipulator and shielded doors) is also equipped to facilitate the encapsulation of the waste.

The encapsulation facility is remotely operated to protect workers. Shielded doors are provided to reduce the dose rate in the operation area, whilst the ventilation maintains a slight negative pressure to prevent radioactive materials from being released into the environment.

h) Drum detection device

The drum detection device located in BWX is composed of radiation detector, support, rotating mechanism, measurement control cabinet and other components. It is mainly used to detect and record the activity, surface dose rate and surface contamination of the waste packages.

i) Sorting box

The sorting box is located in the BQS and is used to segregate the DAW into different drums according to their waste properties. It consists of a lifting and tilting device, a sorting box body, a hydraulic shear, a waste transfer belt, a hydraulic power unit and an electrical & control equipment. The lifting and tilting device is designed to feed the waste from the drums into the sorting box. The hydraulic shear is designed to cut bulky waste into smaller pieces. The lifting and tilting device and hydraulic shear are driven by hydraulic power.

Three sorting positions and one dumping position are provided for the sorting box, allowing four workers to work simultaneously.

j) Pre-compactor

The pre-compactor is located in the BQS and used to compress the compactable waste in drum before transportation off-site. It is composed of the frame, press head, press base plate, the hydraulic power unit and the electrical & control equipment. The compaction force is supplied by hydraulic power unit.

k) Roller conveyors

The roller conveyors are located in the BQS. They are mainly used to convey the drums between the function stations. The function stations include the sorting station and grouting station.

l) Grouting device

The grouting device is located in the BQS and used to immobilise the waste in the drums with cement grout. It is mainly composed of an additive tank, two cement silos, cement dosing screw, cement mixing device and the electrical & control equipment.

m) Others

For LLW waste package buffer store, the forklift and manual control crane are used to handle the packages.

For ILW waste package interim storage, the main equipment is the waste package lifting software-controlled crane, which is operated remotely in a control room. It is composed of beam, rail, hoister, cable and the electrical & control equipment. The crane can lift and transfer the waste package between pre-set positions automatically.

Detailed information on the equipment is presented in Reference [57]."

23.8.3.3.3 System Operation

The Sub-chapter "*23.8.3.3.3 System Operation*" is removed.

23.8.3.4 Preliminary Design Substantiation

23.8.3.4.2 Compliance with Design Requirements

In the bullet point "*e) Decommissioning*", the sentence "*Facilitating decommissioning is considered in the design of TES [SWTS] by applying the design measures described in Sub-chapter 23.2.5.*" is modified to read:

> "*Requirement for facilitating decommissioning is considered in the design of TES [SWTS] by applying the design principles that are in accordance with the relevant requirements described in Sub-chapter 23.2.5, including reducing residual radioactive sources through adequate emptying provisions, decontamination provisions, equipment structure design, layout of equipment and pipelines, etc., so as to facilitate decommissioning operations and reduce the accumulation of radioactive waste that will require management during decommissioning.*"

23.8.3.5 System Flow Diagram

In the diagram "*F-23.8-1 Solid Waste Treatment System (TES)*", the Category of the "*RCCAs and SCCAs*", the management routes of the "*ICIAs*" and "*Ventilation Filter Cartridge*" and the terminology are modified.

23.8.4 ILW Interim Storage

The Sub-chapter "*23.8.4 ILW Interim Storage*" and all of its sub-titles "*23.8.4.1 Operational Function*", "*23.8.4.2 Storage Capacity*" and "*23.8.4.3 Storage Process*" are downgraded to be sub-titles of an added Sub-chapter "*23.8.4 Waste Storage*", with an added Sub-chapter "*23.8.4.1 LLW Buffer Storage*" as follow:

> "*23.8.4 Waste Storage*
>
> *23.8.4.1 LLW Buffer Storage*
>
> *23.8.4.2 ILW Interim Storage*
>
> *23.8.4.2.1 Operation Function*
>
> *23.8.4.2.2 Storage Capacity*
>
> *23.8.4.2.3 Storage Process*"

And the added text reads:

> "*23.8.4 Waste Storage*
>
> *23.8.4.1 LLW Buffer Storage*
>
> *LLW buffer storage areas are provided in the BQS to temporarily store the LLW and VLLW waste packages prior to dispatch to off-site waste service facilities, including conditioned LLW packages, metal waste packages, combustible waste packages,*

super-compactable waste packages, oil and solvent packages, low activity spent resin packages and ventilation filter cartridge packages.

Several storage areas are provided for different types of waste packages, including metal DAW packages storage area and LLW (non-metal DAW and other LLW) packages storage areas. Although waste is to be disposed of as soon as reasonably practicable after production to minimise the accumulation on-site, sufficient space is provided for storage of waste packages generated in approximately one year. All the drums and boxes are prepared for off-site transportation in the BQS.

Detailed information is presented in the 'Conceptual Proposal of Waste Auxiliary Building', Reference [E-3]."

23.8.4.1 Storage Capacity

The sentence "*The storage capacity of first phase will accommodate the waste generated during the operational period of 30 years of two UK HPR1000 units, and the second phase capacity will be determined about 20 - 30 years later, taking account of the actual ILW arising from operation and possible refined quantification of decommissioning ILW.*" in the first paragraph is modified to read:

"*The storage capacity of the first phase facility is designed to accommodate the ILW packages generated by two UK HPR1000 units during the initial operation period of 30 years, and the storage capacity of the second phase facility will be designed to accommodate the ILW packages to be generated during the remaining operation period and the decommissioning of two UK HPR1000 units.*"

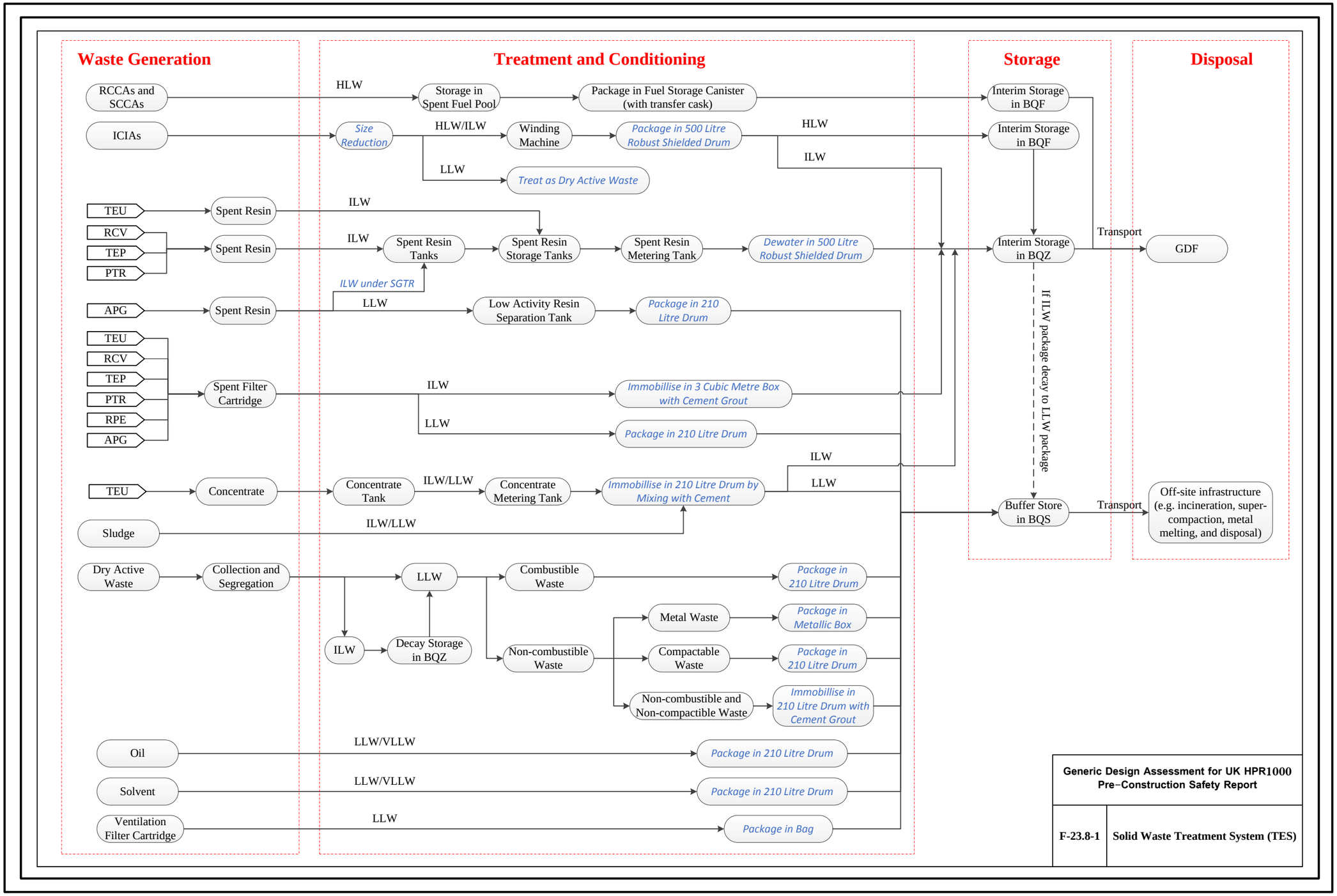

F-23.8-1 Solid Waste Treatment System (TES)

23.9 Disposability

23.9.1 LLWR Agreement in Principle

The Sub-chapter "*23.9.1 LLWR Agreement in Principle*" is modified to read:

"*In the UK, the waste service suppliers provide a wide range of waste services to the UK nuclear industry. The Waste Acceptance Criteria (WAC) published by waste service suppliers are used to demonstrate that LAW packages generated by the UK HPR1000 can be compatible with off-site facilities and no orphan waste will be created. Based on the assumption presented in Sub-chapter 23.2.3, establishing an 'Agreement in Principle' with LLWR during GDA ensures that LAW generated during reactor operation can be accepted by off-site facilities to minimise the accumulation of radioactive waste.*

In order to support the establishment of the 'Agreement in Principle', the 'UK HPR1000 Waste Enquiry Form', Reference [61], was prepared and submitted to LLWR to undertake disposability in principle assessment for UK HPR10000. LLWR has conducted their assessment and sets out their current position around the likely acceptability of the wastes for disposal at the LLWR or via their current treatment/disposal providers, and explains the issues and constraints surrounding the waste for disposal. Details are present in the letter 'Disposability in Principle Assessment for UK HPR10000', Reference [E-4].

In Reference [61], ventilation filter cartridge is proposed to be packaged into 210 litre drum. Since then, it has been decided to be packaged in appropriate bag to allow opportunities to utilise alternative treatment solutions in the future to support application of the waste hierarchy and in line with LLWR recommendation in their 'Agreement in Principle' letter, Reference [E-4]. Change of package type doesn't impact the characteristics of ventilation filter cartridge and bag is also one of the package types that are accepted by LLWR for ventilation filter cartridge packaging (Sizewell B practice). Therefore, this change doesn't impact the validity of the 'Agreement in Principle' that has been granted by LLWR, Reference [E-4].

Regarding the issues and constraints raised by LLWR, response has been provided in the 'Response to LLWR Agreement in Principle', Reference [E-5], which conclude there is no particular risk for any waste stream to become orphan waste and/or to result in significant burden or risk/impact at site licensing stage.

At site licensing stage, the future operator will continually undertake applicable activities to ensure that all LAW generated by the UK HPR1000 can be safely managed and disposed of in line with the principles of ALARP and BAT."

23.13 References

The following documents are referenced and/or have been updated:

[21] *ONR, Safety Assessment Principles for Nuclear Facilities, 2014 Edition, Revision 1, January 2020.*

[25] *CGN, Integrated Waste Strategy (IWS), GHX00100070DNFF03GN, Rev F, May 2020.*

[33] *CGN, Optioneering Report for Liquid Radioactive Waste Processing Techniques, GHX00100042DNFF03GN, Rev F, April 2020.*

[34] *CGN, TEU-Liquid Waste Treatment System Design Manual Chapter 4 System and Component Design, GH917TEU004DNFF45GN, Rev D, July 2019.*

[46] *CGN, Optioneering Report for Gaseous Radioactive Waste Processing Technique, GHX00100038DNFF03GN, Rev F, April 2020.*

[47] *CGN, Sizing Report of the Activated Charcoal Delay Beds, GHX00100039DNFF03GN, Rev D, November 2019.*

[52] *CGN, Waste Inventory for Operational Solid Radioactive Waste, GHX00100069DNFF03GN, Rev D, June 2020.*

[54] *CGN, Optioneering Report for Operational Solid Waste Processing Techniques, GHX00100056DNFF03GN, Rev D, June 2020.*

[55] *CGN, Sizing Report of Main Equipment in Solid Waste Treatment System, GHX00100068DNFF03GN, Rev D, November 2019.*

[56] *CGN, Management Proposal of Waste Non-Fuel Core Components, GHX00100064DNFF03GN, Rev E, August 2020.*

[57] *CGN, TES-Solid Waste Treatment System Design Manual Chapter 4 System and Component Design, GHX17TES004DNFF45GN, Rev E, November 2019.*

[61] *CGN, UK HPR1000 Waste Enquiry Form, GHX00100036DNFF03GN, Rev C, November 2019.*

[62] *CGN, UK HPR1000 HAW Disposability Assessment Submission, GHX00100035DNFF03GN, Rev D, June 2020.*

And the following references are added:

[E-1] *CGN, Sizing Report of Main Equipment in Liquid Waste Management System, GHX00100067DNFF03GN, Rev D, November 2019.*

[E-2] *CGN, Selection of waste containers for disposal of ILW, GHX00100055DNFF03GN,*

Rev C, June 2020.

[E-3] CGN, Conceptual Proposal of Waste Auxiliary Building, GHX00100095DNFF03GN, Rev B, July 2020.

[E-4] LLWR, Disposability in Principle Assessment for UK HPR10000, 3BE-3BRA-0-COO-L-4807, January 2020.

[E-5] CGN, Response to LLWR Agreement in Principle, GHX00100099DNFF03GN, Rev B, June 2020.

Appendix F – Amendments to PCSR Chapter 24 – Decommissioning

AMENDED CONTENT

24.1 List of Abbreviations and Acronyms

ALARP	*As Low As Reasonably Practicable*
BFX	*Fuel Building*
BQF	*Spent Fuel Interim Storage Facility*
BQZ	*ILW Interim Storage Facility*
GDA	*Generic Design Assessment*
GDF	*Geological Disposal Facility*
ILW	*Intermediate Level Waste*
NPP	*Nuclear Power Plant*
PCSR	*Pre-Construction Safety Report*
SFA	*Spent Fuel Assembly*
SFP	*Spent Fuel Pool*
SFIS	*Spent Fuel Interim Storage*
UK HPR1000	*UK version of Hua-long Pressurised Reactor*

24.2 Introduction

24.2.4 Key Assumptions

The paragraph "*e) Spent fuel will be stored in Spent Fuel Pool (SFP) for several years, followed by storage in the Spent Fuel Interim Storage (SFIS) facility until the Geological Disposal Facility (GDF) is available;*" is modified to read:

> "*e) Spent fuel will be stored in Spent Fuel Pool (SFP) for several years, followed by storage in the Spent Fuel Interim Storage Facility (BQF) until the Geological Disposal Facility (GDF) is available;*"

24.3 Applicable Codes and Standards

The paragraph "*a) Environmental Permitting Regulations 2016, Reference [9]; b) Hazardous Waste Regulations 2005, Reference [10];*" is modified to read:

> "*a) Environmental Permitting Regulations 2018, Reference [9];*
>
> *b) Hazardous Waste Regulations 2018, Reference [10];* "

After paragraph "*g) UK Strategy for Radioactive Discharges, 2009, Reference [15]*" the following paragraph is added.

"*h) Regulatory Guidance Series, No RSR 1, Radioactive Substances Regulation – Environmental Principles, Version 2, April 2010, Reference [F-1];*

i) Management radioactive waste from decommissioning of nuclear sites: Guidance on Requirements for Release from Radioactive Substance Regulation; Version 1.0, July 2018, Reference [F-2]."

24.4 Design Considerations of Facilitating Decommissioning

The paragraph "*During the UK HPR1000 design stage, the requirements for facilitating decommissioning have been and will continue to be considered.*" is modified to read:

"*During the UK HPR1000 design stage, the requirements for facilitating decommissioning have been and will continue to be considered, Reference [F-3].*"

24.5 Decommissioning Strategy

24.5.1 General Principles of Decommissioning Strategy and End State

After paragraph "*m) The benefits of delaying operations to take advantage of radioactive decay should be considered.*" the following paragraph is added.

"*n) The requirements for the release from radioactive substances regulation should be considered.*"

24.6 Preliminary Decommissioning Plan

24.6.1 Timing of Decommissioning

24.6.1.3 Stage 3

The paragraph "*a) Safe storage of SFAs in the SFP; b) After appropriate cooling period removal and transport of SFAs from the SFP to SFIS facility;*" is modified to read:

"*a) Safe storage of SFAs (including failed fuels);*

b) After appropriate cooling period removal and transport of SFAs from the SFP to BQF;"

24.6.1.4 Stage 4

The paragraph "*c) Dismantling of the BQZ and SFIS facility;*" is modified to read:

"*c) Dismantling of the BQZ and BQF;*"

After paragraph "*f) De-licensing.*" the following paragraph is added.

"*g) Release from radioactive substances regulation.*"

24.6.2 Radiological Characterisation

The paragraph "*The characterisation results provide details of the radiological status of the NPP, which help to identify the radiological risks for decommissioning and to establish the suitability of the decommissioning plan.*" is modified to read:

> "*The characterisation results provide details of the radiological status of the NPP, which help to identify the radiological risks for decommissioning and to establish the suitability of the decommissioning plan and to develop the decommissioning radioactive waste management strategy* "

24.6.3 Spent Fuel Management

The paragraph "*a) The SFAs will then be loaded into fuel storage canisters and transferred to the SFIS facility within transfer casks. The management of SFAs produced during the last several fuel cycles prior to decommissioning will be similar to that during operation. After the technology optioneering, the dry storage in casks technology is considered as the preferred storage option for the SFIS facility in the GDA phase. The on-site storage of spent fuel in a separate facility is considered as interim storage; b) The storage facility of the UK HPR1000 will ensure easy retrieval of SFAs from SFIS. It is intended that the SFAs will be safely disposed in the GDF. The spent fuel will be stored in the SFIS facility until the final disposal facility is available.*" is modified to read:

> "*a) The on-site storage of spent fuel in a separate facility is considered as interim storage. After the technology optioneering, the dry storage in casks technology is considered as the preferred storage option for the SFIS in the GDA phase. The SFAs will be loaded into fuel storage canisters and then transferred to the BQF within transfer casks. The management of SFAs produced during the last several fuel cycles prior to decommissioning will be similar to that during operation;*
>
> *b) The management of spent fuel is expected to require cooling, storage and re-packaging for GDF disposal. The storage facility of the UK HPR1000 will ensure retrieval of SFAs from BQF. It is intended that the SFAs will be safely disposed of in the GDF. The spent fuel will be stored in the BQF until the final disposal facility is available.*"

The paragraph "*More information regarding fuel removal and spent fuel storage can be found in PCSR Chapter 28 Fuel Route and Storage and Chapter 29 Interim Storage of Spent Fuel.*" is modified to read:

> "*Failed fuels are expected to be stored within the spent fuel pool until the decommissioning of the Fuel Building (BFX), which is presented in PCSR chapter 28. After that, the failed fuel will be packaged into a specific container, which is selected according to subsequent storage and disposal requirements, and then transferred to BQF for further storage. More information for failed fuels packaging options can be found in Reference [F-4]. The final management strategy for failed fuels will be*

determined by the future licensee. The strategy for failed fuel will be reviewed and updated throughout the station operational life in line with regulatory development, disposal options and available technologies.

More information regarding fuel removal and spent fuel storage in spent fuel pool can be found in PCSR Chapter 28 Fuel Route and information for interim storage can be found be in Chapter 29 Interim Storage of Spent Fuel."

24.6.4 Waste management

The paragraph "*The detailed information regarding the decommissioning radioactive waste management proposal during GDA is presented in Decommissioning Waste Management Proposal, Reference [32].*" is modified to read:

"*The detailed information regarding the decommissioning radioactive waste management proposal (including wastes arisings due to the storage of spent fuel) during GDA is presented in Decommissioning Waste Management Proposal, Reference [32].*"

24.6.8 Delicensing

The paragraph "*The end-point of decommissioning includes decommissioning of all facilities including the Interim Storage Facilities.*" is modified to read:

"*The end-point of decommissioning includes decommissioning of all facilities and release of the site from radioactive substances regulation and the requirements of the Nuclear Site License.*"

24.10 References

The following documents are referenced and/or have been updated:

[1] ONR, Safety Assessment Principles for Nuclear Facilities, Revision 1, 2020.

[16] CGN, Analysis Report of Applicable Codes and Standards, GHX00100024DNFF02GN, Rev E, May 2020.

[24] CGN, OPEX on Decommissioning, GHX71500008DNFF03GN, Rev D, April 2020.

[25] CGN, Consistency Evaluation for Design of Facilitating Decommissioning, GHX71500005DNFF03GN, Rev D, June 2020.

[29] CGN, Decommissioning Technical User Source Term Report, GHX00530009DNFP03GN, Rev E, June 2020.

[30] CGN, Decontamination Processes and Techniques during Decommissioning, GHX71500010DNFF03GN, Rev C, June 2020.

[31] CGN, Preliminary Disassembly Program for the Main Equipment Decommissioning, GHX71500001DPZS03GN, Rev E, June 2020.

[32] CGN, Decommissioning Waste Management Proposal, GHX71500009DNFF03GN, Rev E, June 2020.

[35] CGN, Integrated Waste Strategy (IWS), GHX00100070DNFF03GN, Rev F, May 2020.

[37] CGN, UK HPR1000 HAW Disposability Assessment Submission, GHX00100035DNFF03GN, Rev D, June 2020.

[38] CGN, Dismantling Example Analysis of Steam Generator, GHX71500002DPZS03GN, Rev B, January 2020.

And the following references are added:

[F-1] EA, Regulatory Guidance Series, No RSR 1, Radioactive Substances Regulation – Environmental Principles, Version 2, April 2010.

[F-2] EA, SEPA and NRW, Management Radioactive Waste from Decommissioning of Nuclear Sites: Guidance on Requirements for Release from Radioactive Substance Regulation; Version 1.0, July 2018.

[F-3] CGN, Design Requirements for Facilitating, GHX71500016DNFF03GN, Rev C, April 2020.

[F-4] CGN, Spent Fuel Interim Storage Facility Design, GHX00100081DNFF03GN, Rev E, September 2020.

Appendix G – Amendments to PCSR Chapter 28 – Fuel Route and Storage

AMENDED CONTENT

28.1 List of Abbreviations and Acronyms

FA	*Fuel Assembly*
NFCC	*Non-Fuel Core Components*
PCSR	*Pre-Construction Safety Report*
PMC	*Fuel Handling and Storage System [FHSS]*
PTR	*Fuel Pool Cooling and Treatment System [FPCTS]*
RCCA	*Rod Cluster Control Assemblies*
SCCA	*Stationary Core Component Assembly*
SFP	*Spent Fuel Pool*

System codes (XXX) and system abbreviations (YYY) are provided for completeness in the format (XXX [YYY]), e.g. Fuel Handling and Storage System (PMC [FHSS]).

28.2 Introduction

28.2.1 Scope

Before the paragraph commencing with "*These operations are mainly supported by the following related systems*", the following paragraph is added:

> "*The non-fuel core components, including Rod Cluster Control Assembly (RCCA) and Stationary Core Component Assembly (SCCA), are transferred and stored together with FAs during the fuel handling operations and storage stages. In the following sub-chapters, the 'non-fuel core components' (NFCCs) terminology is used as short for RCCAs and SCCAs if there is no special additional explanation. It is necessary to take account of the presence of non-fuel core components when carrying out safety assessment of the fuel handling and storage related operations. Meanwhile, the safety of non-fuel core components themselves should be considered for its whole lifetime. These contents are included in the relevant safety assessment work, such as criticality analysis, cooling of irradiated fuel assemblies, radioactive waste management, etc. They are addressed in the following PCSR Chapters:*
>
> *a) Handling operations: introduced in this Chapter;*
>
> *b) Criticality analysis: safety assessment is presented in Section 28.6.3 of this Chapter;*
>
> *c) Cooling of irradiated fuel assemblies: ensured by PTR [FPCTS] covered in PCSR Chapter 10;*
>
> *d) Material properties: covered in PCSR Chapter 5 which presents the design of*

fuel assembly and relevant components;

e) *Radioactive waste management: covered in PCSR Chapter 23 which presents the safe management of potential radioactive waste.*"

28.4 Overview of the PMC [FHSS]

28.4.3 Processes of the PMC [FHSS]

After the paragraph "*Diagrams of these sub-processes are shown in Fuel Handling and Storage System Design Manual Chapter 9 Flow Diagrams.*" the following paragraph is added:

"*During the fuel handling operations and storage process, fuel assemblies are always transferred and stored together with any other relevant non-fuel core components inserted in the FAs. In the following description of the PMC [FHSS] process, the term 'fuel assemblies' refers to both fuel assemblies and any other relevant non-fuel core components inserted in the FAs if there is no special additional explanation.*"

28.6 Safety Assessment of the PMC [FHSS]

28.6.3 Safety Assessment of Main Equipment

28.6.3.7 Underwater Fuel Storage Racks

At the end of this Sub-chapter, the following paragraph is added:

"*Note: the non-fuel core components which are spent are inserted in spent fuel assemblies and stored in the SFP. Therefore, the storage in SFP of spent non-fuel core components does not impact the storage capacity of underwater fuel storage racks. However the presence of non-fuel core components should be taken into account in the safety assessment of the PMC [FHSS] with respect to handling, criticality control, cooling, and shielding, as well as radioactive waste management.*"

Appendix H – Amendments to PCSR Chapter 29 – Interim Storage of Spent Fuel

AMENDED CONTENT

29.1 List of Abbreviations and Acronyms

ALARP	As Low As Reasonably Practicable
BAT	Best Available Techniques
BFX	Fuel Building
BQF	Spent Fuel Interim Storage Facility
BQZ	ILW Interim Storage Facility
DMK	Fuel Building Handling Equipment [FBHE]
GDA	Generic Design Assessment
GDF	Geological Disposal Facility
HLW	High Level Waste
ICIA	In-Core Instrument Assembly
ILW	Intermediate Level Waste
NFCC	Non-Fuel Core Component
OPEX	Operating Experience
PMC	Fuel Handling and Storage System [FHSS]
PTR	Fuel Pool Cooling and Treatment System [FPCTS]
RCCA	Rod Cluster Control Assembly
RWM	Radioactive Waste Management Ltd (UK)
SCCA	Stationary Core Component Assembly
SFA	Spent Fuel Assembly
SFAIRP	So Far As Is Reasonably Practicable
SFIS	Spent Fuel Interim Storage
SFP	Spent Fuel Pool
UK HPR1000	UK version of the Hua-long Pressurised Reactor

System codes (XXX) and system abbreviations (YYY) are provided for completeness in the format (XXX [YYY]), e.g. Fuel Handling and Storage System (PMC [FHSS]).

29.2 Introduction

29.2.1 Overview

In bullet point "*a) Short Term Storage in the SFP*", the following sentence "*More information relevant to fuel handling and short-term storage within the BFX is presented in PCSR Chapter 10 and Chapter 28.*" is modified to read:

> "*More information relevant to the handling and short-term storage of spent fuel (including failed fuel), Rod Cluster Control Assemblies (RCCAs) and Stationary Core Component Assemblies (SCCAs) within the BFX is presented in PCSR Chapter 28.*"

After the sentence "*For non-fuel waste in the core and other higher activity waste, the waste characterisation and management strategy is presented in PCSR Chapter 23.*", the following text is added:

> "*The design for interim storage of Non-Fuel Core Components (NFCCs) in Spent Fuel Interim Storage Facility (BQF) is presented in sub-chapter 29.6.2.*"

After the sentence "*The safety assessment results are documented in this chapter and corresponding safety assessment reports.*", the following text is added:

> "*This chapter also presents suitable design information to demonstrate that current SFIS conceptual design has been optimised through the application of Best Available Techniques (BAT).*"

29.2.2 Chapter Route Map

The bullet point "*c) Demonstrate that the concept design for SFIS proposed in GDA phase is capable of achieving safety storage of spent fuel generated from the UK HPR1000 operations.*" is modified to read:

> "*c) Demonstrate that the conceptual design for SFIS proposed in GDA phase is capable of safely storing of spent fuel and other High Level Wastes (HLWs) generated from the UK HPR1000 operation.*"

29.2.3 Scope of Spent Fuel Interim Storage

The paragraph commencing with "*Failed fuels generated during operation of the UK HPR1000……*" is modified to read:

> "*Failed fuels generated during operation of the UK HPR1000 are currently considered to be stored in the SFP. The design for failed fuel storage within the SFP has been presented in PCSR Chapter 28 and relevant supporting documents. And the potential options for failed fuel management after removal from the spent fuel pool are presented in sub-chapter 29.6.2. The final management strategy of failed fuel will not be determined during GDA but at site specific stage.*"

The bullet point "*b) Conceptual design*" is modified to read:

"*b) SFIS conceptual design, including the storage considerations of other HLWs in BQF.*"

29.2.5 Interfaces with Other Chapters

The paragraph commencing with "*PCSR Chapter 28 covers the Fuel Handling and Storage System (PMC [FHSS])……*" is modified to read:

"*PCSR Chapter 28 covers the Fuel Handling and Storage System (PMC [FHSS]), including the storage arrangement in the BFX and transfer of spent fuel (including failed fuel), RCCAs and SCCAs from the SFP to a transfer cask for delivery, which is the foregoing work for SFIS.*"

29.2.6 Assumptions

The bullet point "*a) The BQF receives the spent fuel……*" is modified to read:

"*a) The BQF receives the spent fuel produced by 2 units of the UK HPR1000.*"

29.3 Applicable Codes and Standards

After the bullet point "*e) The Environmental Permitting (England and Wales) Regulations 2016.*", the following text is added:

"*f) The Environmental Permitting (England and Wales) (Amendment) Regulations 2018.*

g) The Environmental Permitting (England and Wales) (Amendment) (No. 2) Regulations 2018."

After the bullet point "*e) Radioactive Waste Treatment and Conditioning Safety Reference Levels,*", the following text is added:

"*f) Radioactive Substances Regulation – Environmental Principles, Regulatory Guidance Series, Reference [H-1].*"

29.4 Spent Fuel Interim Storage Overview

The content in T-29.4-1 is modified to read as followed:

SSC	Roles in the SFIS	Presentation in PCSR
Fuel Pool Cooling and Treatment System (PTR [FPCTS])	• Provides the decay heat removal function for SFAs in the SFP. • Provides capability to flood and drain the Loading and Preparation Bays.	Chapter 10

SSC		Roles in the SFIS	Presentation in PCSR
SFP		• Houses the underwater storage fuel rack containing the SFAs, RCCAs and SCCAs, including the failed fuels.	Chapter 28
BFX		• Houses the SFP, Loading Bay, and Preparation Bay. • Houses the majority of the Lifting and Handling Processes. • Provides external hazard protection for the SFIS SSC • Provides an additional confinement barrier for the SFAs. • Provides SFAs retrieval capability.	Chapter 16
BQF		• Houses the storage structure for spent fuel dry storage. • Houses the HLW packages. • Houses auxiliary equipment related to the spent fuel interim storage process.	Chapter 29
SFIS Systems		• Provides decay heat removal, confinement (including shielding), lifting and handling, and criticality control function to the SFAs during handling and transfer from the SFP to the BQF, including the entire interim storage duration in the BQF.	Chapter 29
Fuel Handling and Storage System	Spent Fuel Pool Crane	• Lifting and handling system for the SFAs between the SFP and the spent fuel cask.	Chapter 28
	Underwater Fuel Storage Rack	• Storage location for the SFAs in the SFP.	
DMK	Spent Fuel Cask Crane	• Lifting and handling system for the spent fuel cask.	Chapter 10

29.5 Design Requirements

29.5.4 Other Requirements

After the paragraph commencing with "*The exact location of the BQF has not been decided yet……*", the following text is added:

> "*The storage facility will be designed in consistency with environmental requirements, including the functional requirements on facility to protect the environment and minimise waste.*
>
> *According to UK context and the environmental requirements for UK HPR1000 design, the design of BQF should meet with the following requirements:*
>
> *a) The storage facility will be designed to provide effective containment and prevent leakage of radioactive material;*
>
> *b) The storage facility together with the waste packages should provide the multiple-barrier protection of the environment;*
>
> *c) The storage facility and the waste packages together should provide appropriate shielding to reduce the radiation exposure to workers and the public to So Far As Is Reasonably Practicable (SFAIRP).*
>
> *Measures to control the generation of radioactive waste, in terms of both volume and radioactivity content, are considered, beginning with the design phase, and throughout the lifetime of the facility. The control measures for radioactive waste minimisation are generally applied in the following order of priority in line with waste hierarchy during the design of SFIS:*
>
> *a) Prevent and minimise waste generation;*
>
> *b) Reuse items as originally intended;*
>
> *c) Recycle materials;*
>
> *d) Dispose as waste.*"

29.6 SFIS Design

29.6.1 Technology Optioneering

The sentence commencing with "*The criteria for technology evaluation were developed……*" is modified to read:

> "*The criteria for technology evaluation were developed considering OPEX from UK projects and international RGP, among which the generation of radioactive waste during operation for different options is also included, to consider the minimisation*

of radioactive waste and environmental impact is taken into account in SFIS proposal."

29.6.2 Design Proposal

29.6.2.1 Overview

The paragraph commencing with "*The second phase capacity will be determined approximately 30 years later, taking account of the actual High Level Waste (HLW) arising from operation, possible decommissioning waste and the progress of work on GDF.*" is modified to read:

"*The second phase capacity will be determined approximately 15~20 years later, taking account of the actual HLW arising from operation and the progress of work on GDF.*"

For the paragraph commencing with "*The following are identified as the main additional systems, which are located in the BQF to support SFIS normal operations:*", the bullet point "*a) Ventilation system*" is modified to:

"*a) Ventilation system, which is used to ensure the passive ventilation required for spent fuel storage, the potential monitoring and control of environmental conditions for other HLWs storage and to maintain temperatures suitable for workers.*"

After the paragraph commencing with "*The design information is provided based on optioneering results and UK practice……*", the following text is added:

"*Currently the failed fuel generated from operation of UK HPR1000 is proposed to be stored in the spent fuel pool until the decommissioning of BFX. Considering the international OPEX, two possible options for the containerisation/encapsulation of failed fuel after the removal from the spent fuel pool are available, as presented in Reference [25]. None of these two options is foreclosed by the current strategy for UK HPR1000. Failed fuel management is a developing area all over the world and it is likely that worldwide OPEX in this field will have increased by the time that the UK HP1000 enters decommissioning. This may potentially include new options for the management of failed fuel. The final strategy for failed fuel management will therefore be decided at an appropriate stage (e.g. close to final shutdown or during decommissioning).*"

29.6.2.2 Process Design

After the sub-chapter "*26.6.2.2 Process Design*", a sub-chapter is added:

"*29.6.2.2.1 Overall Process for SFIS*"

After the sub-chapter "*26.6.2.2.1 Overall Process for SFIS*" the following sub-chapter is added:

"*29.6.2.2.2 ICIAs Package Management in BQF*

The ICIAs packages are 500 litre robust shielded drums, which are made of ductile cast iron with 160 mm thickness. Furthermore, additional internal stainless steel shielding thicknesses is also provided, which can therefore supply sufficient shielding to protect the operator during handling and movement operations of the containers on-site without any additional shielding over-package. The general process for import and export of the waste packages is as follow:

a) Import of the ICIAs waste package;

b) Storage of waste package;

c) Export of the ICIAs waste package."

29.6.2.3 Equipment

The sentence "*The following components are identified as the main additional components to support normal SFIS operations:*" is modified to read:

"*The following components are identified as the main additional components to support normal SFIS operations and ICIAs packages storage:*"

After the bullet point "*c) Concrete silo, which is used to contain the fuel storage canister and……*", the following text is added:

"*d) 500 litre robust shielded drum, which is used to ensure safe handling, stackability, containment function and radiation shielding for ICIAs.*"

29.6.2.4 Interface

After the sentence commencing with "*The matching analysis, which is an assessment of the physical and design compatibility……*", the following text is added:

"*The radioactive waste management strategy, considering the waste minimisation, is also proposed in the matching analysis, in Reference [26].*"

29.6.2.5 BQF Layout

In bullet point "*c) Storage Area*", the bullet point commencing with "*2) Other waste storage area – an area designed for the storage of other wastes……*" is modified to read:

"*2) Other radioactive waste storage area – an area designed for the storage of other wastes, currently includes an integral independent room to store the 500 litre robust shielded drum with ICIAs waste, which is isolated from other areas by concrete wall and roof, to provide effective containment and prevent leakage of radioactive material. The ICIAs storage room is equipped with ventilation system to maintain the environmental condition for waste packages safe storage.*"

29.6.2.6 Monitoring

The bullet point "*a) Temperature monitoring……*" is modified to read:

"*a) Temperature monitoring:*

The temperature of the ventilation outlet in the concrete silo for spent fuel storage is monitored, in order to judge if the actual operation conditions are consistent with the design conditions. This will enable deducing if any corrective measures are necessary to maintain safe storage conditions and lower the temperature within the structure. When the temperature of the concrete silo is within the design limit, the temperature of different components within the structure (including the canister and fuel cladding) do no exceed the design limits and therefore no failure of fuel cladding occurs.

As indicated in Reference [11], the robust shielded containers for ICIAs storage will typically be stored in unshielded stores with forced ventilation. In order to provide good environmental condition for packages storage, the ventilation system in SFIS is designed to control and monitor the internal environmental conditions such as air condition, temperature and humidity within the other radioactive waste storage area for equipment operation, personnel access and safe storage of ICIAs packages."

The paragraph commencing with "*The humidity and chlorine concentration are important……*" is modified to read:

"*c) Humidity and chlorine concentration monitoring:*

The humidity and chlorine concentration are important factors affecting the long-term performance of concrete silo. However, according to worldwide OPEX, it is not necessary to monitor the humidity and chlorine concentration within the interim storage facility. If there is a failure in the storage structure, the operator can choose to repair the silo during interim storage. Therefore, it is not expected to be necessary to monitor these two factors during spent fuel interim storage.

As the material of 500 litre robust shielded drum is cast iron, the humidity is an important factor that could cause degradation of the package during interim storage. Therefore, the humidity in the other radioactive waste storage area may require to be monitored and be controlled by ventilation system, which will be determined according to equipment performance and site conditions in the nuclear site licensing phase."

29.7 ALARP Assessment

The sentence "*The results of preliminary safety evaluation will contribute to supplier selection and detailed SFIS design in the nuclear site licensing phase.*" is modified to read:

"*The considerations of radioactive waste minimisation for SFIS operation and decommissioning will be included in the ALARP assessment. The results of ALARP demonstration in GDA phase will contribute to supplier selection and detailed SFIS design in the nuclear site licensing phase.*"

29.8 Record Management

The sentence "*In the conceptual design of SFIS, the specific record measures are considered as follows:*" is modified to read:

"*In the conceptual design of SFIS, including the storage of ICIAs in BQF, the specific record measures are considered as follows:*"

After the bullet point "*e) After the lifting of the concrete silo in the designated area……*", the following text is added:

"*The ICIAs package characteristics (i.e. package type, treatment process, production date and unique identifier), all radiological and non-radiological information (i.e. radionuclide activity concentration, chemical characteristics, surface dose rate and contamination level of waste packages), waste package management information (i.e. storage position, disposal route, monitoring and inspection records and maintenance records) and any information that will be required by the GDF owner will be recorded to achieve the safety operation management of the facility and to provide relevant information to final disposal facility owner.*"

29.9 References

The following documents are referenced and/or have been updated:

[11] NDA, Industry Guidance: Interim Storage of Higher Activity Waste Packages – Integrated Approach, Issue 3, January 2017.

[25] CGN, Spent Fuel Interim Storage Facility Design, GHX00100081DNFF03GN, Rev E, September 2020.

[26] CGN, The Matching Analysis of Selected SFIS Technology with Current the UK HPR1000 Design, GHX00100080DNFF03GN, Rev D, September 2020.

And the following references are added:

[H-1] EA, Radioactive Substances Regulation – Environmental Principles, Regulatory Guidance Series No RSR 1 Version 2.0, April 2010.

Appendix 29B

The figure in the Appendix 29B of PCSR Chapter 29 is modified to:

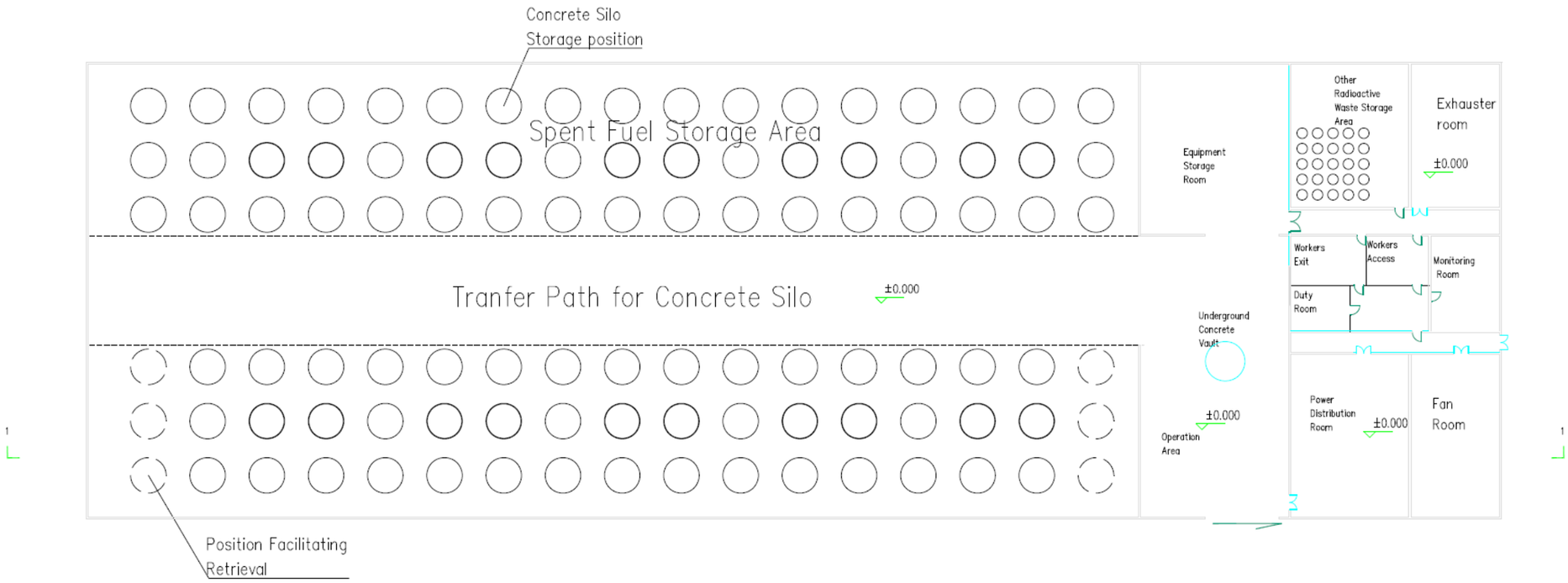

A new figure is added in the Appendix 29B of PCSR Chapter 29: